SN-IPV8080EFAR-B

8MP IR Dome Network Camera



Key Features

- 1/2.8” progressive scan CMOS
- Max. 8MP(3840×2160) @25/30fps resolution
- 2.8mm fixed lens (4mm optional)
- WDR, 3D DNR, ROI, HLC, BLC, Defog
- Support face, human, vehicle detection and capture
- Smart events: intrusion, single line crossing, double line crossing, loitering, wrong way, people counting
- 1/1 audio in/out, 1/1 alarm in/out
- Smart IR up to 30m
- Built-in SD card slot, IP67, IK10, PoE

Specification

Camera	
Image Sensor	1/2.8” Progressive Scan CMOS
Max. Resolution	8MP (3840×2160)
Electronic Shutter	Auto/Manual, 1/5 ~ 1/20,000s
Min. illumination	Color: 0.01 Lux @ (F1.6, AGC ON) , B/W: 0 Lux @ (IR LED ON)
Day & Night	IR cut filter
IR Distance	Up to 30 m (98.4 ft)
IR On/Off Control	Auto/Manual
Pan/Tilt/Rotation Range	Pan: 0˚ ~ 335˚, Tilt: 0˚ ~ 75˚, Rotation: 350˚
Lens	
Lens Type	Fixed focus
Iris	Fixed Iris
Focal Length	2.8 mm (4 mm optional)
F Number	F2.0
Angle of View	H: 97.4°, V: 52.5°
Video	
Streaming Capability	3 Streams
Stream/Frame Rate	Stream1: 3840×2160, 2592×1944, 2592×1520, 2560×1440, 2304×1296, 1920×1080, 1280×720 @ 25/30fps Stream2: D1, VGA, CIF @ 25/30fps Stream3: VGA, CIF, QVGA @ 25/30fps
Bit Rate Control	CBR/VBR
Bit Rate	Stream1: 200kbps~16Mbps Stream2: 100kbps~6Mbps Stream3: 100kbps~3Mbps
Region of Interest	Off/On (8 Zone, Rectangle)
Smart Encode	Support
Image	
Image Adjustment	Brightness, Sharpness, Contrast, Saturation adjustable
Aisle Mode	Support
Mirror	Support
White Balance	Auto/Manual
Day/Night Setting	Auto, Day, Night, Time
Smart IR	Support
Noise Reduction	2D/3D DNR
Image Enhancement	HLC, BLC, Defog
Wide Dynamic Range	True WDR
S/N Ratio	55dB
Motion Detection	Support
Privacy Masking	Support

Smart Function	
Multi-Object Detection	Supports face, human, vehicle detection and capture
Smart Events	Intrusion, Single line crossing, Double line crossing, Loitering, Wrong way, People counting Support alarm triggering by specified target types (human and vehicle)
Audio	
Compression	G.711, RAW_PCM
Bit Rate	8kbps, 16kps, 64kbps
Network	
Protocols	IPv4/IPv6, 802.1x, HTTP, HTTPS, TCP/IP, UDP/IP, RTSP, DHCP, NTP, RTCP/RTP, PPPoE, SMTP, DNS, UPnP, FTP, ARP, SNMP, TLS/SSL
Interoperability	ONVIF, SDK, CGI
Streaming Method	Unicast
Max. User Access	10 Users
Web Viewer	<IE11, Chrome, Firefox, Microsoft Edge
Language	English, Chinese, Polish, Italian, Portuguese, Spanish, Russian, French, Czech, Hungarian. Default: English
Interface	
Network Interface	1 Ethernet (10/100 Base-T) RJ-45 Connector
Audio Interface	1ch Input, 1ch Output
Alarm Interface	1ch Input, 1ch Output
Reset Button	Support
SD Card Slot	Built-in, up to 256GB
Electrical	
Power Supply	DC12V (-25%~+10%)/POE (IEEE 802.3af)
Power Consumption	Max 6 W
Operating Temperature	-40°C ~ 55°C (-40°F ~ 131°F)
Operating Humidity	Less than 90% RH
Ingress Protection	IP67, IK10
Certifications	CE/FCC
Casing	Metal
Dimensions	Φ110 × 85.4mm (φ4.33" × 3.36")
Net Weight	0.47 kg (1.04 lb)

Dimensions (mm)

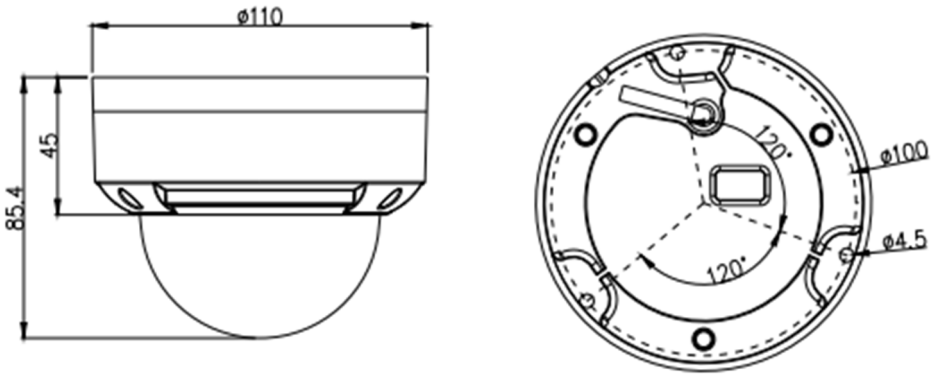

Accessories

Optional：



SN-CBK656
Junction Box



SN-CBK202
Pendant Cap



SN-CBK402
Pendant Mount



SN-CBK501
Wall Mount



SN-CBK502
Wall Mount



SN-CBK101
Pole Mount



SN-CBK102
Corner Mount

©2022 Sunell all rights reserved. Design and specifications are subject to change without notice.