SN-IPD56/40UDR/Z

7-inch 2MP Starlight IR PTZ Network Camera



Key Features

- 1/2" progressive scan CMOS
- 40x optical zoom,16x digital zoom
- Max. 2MP(1920×1080) @ 60fps resolution
- H.264, H.265, MJPEG with smart codec
- 3D DNR, 120dB WDR, ICR, Defog, Digital image stabilization (Anti-shake)
- True Day/Night, Mechanic ICR filter
- Support face, human, vehicle detection and capturing
- Intelligent detection: Intelligent motion detection, Perimeter, Single virtual fence,
- Double virtual fences, Loiter, Converse, Illegal Parking, People counting
- Auto tracking
- Smart IR distance up to 200 m
- IP66, IK10

Specification

Camera	
Image Sensor	1/2” Progressive Scan CMOS
Electronic Shutter	Auto/Manual, 1/5 ~ 1/20,000s
Min. illumination	Color: 0.01 Lux @ (F1.6, AGC ON) B/W: 0.003 Lux @ (F1.6, AGC ON) B/W: 0 Lux @ (IR LED ON)
S/N Ratio	55 dB
Day/Night	Auto(ICR)/Day / Night/Timing
Wide Dynamic Range	True WDR 120 dB
IR Distance	Smart IR, up to 200 m (656.2 ft)
IR On/Off Control	Auto/Manual
Lens	
Focal Length	6 ~ 240mm
Max. Aperture	F1.6 ~ F4.8
Angle of View	H: 58.4° ~ 2.1°
Optical Zoom	40x
Digital Zoom	16x
Focus Control	Auto/Manual
PTZ	
Pan/Tilt Range	Pan: 0° ~ 360° endless, Tilt: -15° ~ +90°
Manual Control Speed	Pan: 0.1° ~ 180°/s, Tilt: 0.1° ~ 90°/s
Preset Speed	Pan: 320°/s, Tilt: 90°/s
Presets	400
PTZ Mode	6 Track, 12 Scan, 12 Tour (up to 32 presets per tour)
3D Positioning	Support
Power-Off Memory	Support
PTZ Status Display	Support
Idle Motion	Activate Preset/ Scan/ Tour/ Track if there is no command in the specified period
Video	
Max. Resolution	1920(H)×1080(V)
Streaming Capability	3 Streams
Stream/Frame Rate	Stream1: 1920×1080/1280×720 @ 50/60fps Stream2: D1/VGA/640×360/CIF/QVGA @ 25/30fps Stream3: VGA/CIF/QVGA @ 25/30fps
Bit Rate Control	CBR/VBR
Bit Rate	Stream1: 200kbps~12Mbps Stream2: 10kbps~6Mbps Stream3: 10kbps~3Mbps
Image Enhancement	HLC/BLC/AGC/AWB/Flip&Mirror/Anti-shake/Defog
Noise Reduction	2D/3D DNR
Region of Interest	Off/On (8 Zone, Rectangle)
Motion Detection	Support
Privacy Masking	Support (8 Zone, Rectangle)

Intelligence	
Smart Function	Support face, human, vehicle detection and capturing
IVS	Perimeter, Single virtual fence, Double virtual fences, Loiter, Converse, Illegal Parking (the six functions support the accurate detection of vehicle and human), People counting
Auto Tracking	Support
Audio	
Audio Compression	G.711, RAW_PCM
Bit Rate	8kbps(G.711), 16kps(RAW_PCM)
Network	
Protocols	IPv4/IPv6, 802.1x, HTTP, HTTPS, TCP/IP, UDP/IP, RTSP, DHCP, NTP, RTCP/RTP, PPPoE, SMTP, DNS, DDNS, UPnP, FTP, ARP, SNMP, TLS/SSL
Interoperability	ONVIF, SDK, CGI
Streaming Method	Unicast, Multicast
Max. User Access	10 Users @ Unicast mode Unlimited Users @ Multicast mode
Web Viewer	<IE11, Chrome, Firefox, Microsoft Edge
Management Software	SunView
Upgrade Method	Via HTTP, HTTPS, TELNET, FTP, SSH
Interface	
Network Interface	1 x Ethernet (10/100 Base-T) RJ-45 Connector
Audio Interface	1ch Input, 1ch Output
Alarm Interface	7ch Input, 2ch Output
RS485	Support
CVBS Output	Support
Built-in SD Card Slot	Yes (Built-in), up to 256GB
Electrical	
Power Supply	AC24V/Hi-PoE (IEEE 802.3bt) (Original AC Adapter Included)
Power Consumption	Less than 40 W
Operating Temperature	Starting Temperature: -40°C ~ 60°C (-40°F ~ 140 °F) Working Temperature:-55°C ~ 60°C (-67°F ~ 140 °F)
Operating Humidity	Less than 90% RH
Ingress Protection	IP66, IK10, TVS4000V
Certifications	UL/CE/FCC
Casing	Metal
Dimensions	Φ226 × 362.8 mm (Φ8.9 × 14.28 inch)
Net Weight	5.2 kg (11.46 lb)

Dimensions (mm)

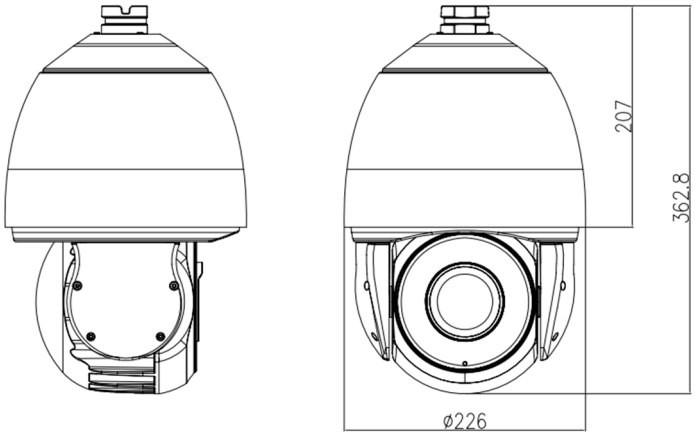

Accessories

Optional：



SN-BK349
Wall Bracket



SN-BK348
Ceiling Bracket



SN-BK605
Corner Mount



SN-BK604B
Pole Mount



SN-BK367
Junction Box



SN-BK355
Wall Bracket



SN-BK358
Corner Mount



SN-BK359
Pole Mount

©2022 Sunell all rights reserved. Design and specifications are subject to change without notice.