

IR Bullet AI Network Camera Quick Setup Guide

NO:101-300-0672-01
Issue:1.1

Precautions

Fully understand this document before using this device, and strictly observe rules in this document when using this device. If you install this device in public places, provide the tip "You have entered the area of electronic surveillance" in an eye-catching place. Failure to correctly use electrical products may cause fire and severe injuries.

⚠ WARNING	It alerts you to moderate dangers which, if not avoided, may cause minor or moderate injuries.
⚠ CAUTION	It alerts you to risks. Neglect of these risks may cause device damage, data loss, device performance deterioration, or unpredictable results.
NOTE	It provides additional information.

⚠ WARNING

- Strictly observe installation requirements when installing the device. The manufacturer shall not be held responsible for device damage caused by users' non-conformance to these requirements.
- Strictly conform to local electrical safety standards and use power adapters that are marked with the LPS standard when installing and using this device. Otherwise, this device may be damaged.
- Use accessories delivered with this device. The voltage must meet input voltage requirements for this device.
- If this device is installed in places with unsteady voltage, ground this device to discharge high energy such as electrical surges in order to prevent the power supply from burning out.
- When this device is in use, ensure that no water or any liquid flows into the device. If water or liquid unexpectedly flows into the device, immediately power off the device and disconnect all cables (such as power cables and network cables) from this device.
- Do not focus strong light (such as lighted bulbs or sunlight) on this device. Otherwise, the service life of the image sensor may be shortened.
- If this device is installed in places where thunder and lightning frequently occur, ground the device nearby to discharge high energy such as thunder strikes in order to prevent device damage.

⚠ CAUTION

- Avoid heavy loads, intensive shakes, and soaking to prevent damages during transportation and storage. The warranty does not cover any device damage that is caused during secondary packaging and transportation after the original packaging is taken apart.
- Protect this device from fall-down and intensive strikes, keep the device away from magnetic field interference, and do not install the device in places with shaking surfaces or under shocks.
- Clean the device with a soft dry cloth. For stubborn dirt, dip the cloth into slight neutral cleanser, gently wipe the dirt with the cloth, and then dry the device.
- Do not jam the ventilation opening. Follow the installation instructions provided in this document when installing the device.
- Keep the device away from heat sources such as radiators, electric heaters, or other heat equipment.
- Keep the device away from moist, dusty, extremely hot or cold places, or places with strong electric radiation.
- If the device is installed outdoors, take insect- and moisture-proof measures to avoid circuit board corrosion that can affect monitoring.
- Remove the power plug if the device is idle for a long time.
- Before unpacking, check whether the fragile sticker is damaged. If the fragile sticker is damaged, contact customer services or sales personnel. The manufacturer shall not be held responsible for any artificial damage of the fragile sticker.

Special Announcement

- All complete products sold by the manufacturer are delivered along with nameplates, quick setup guide and accessories after strict inspection. The manufacturer shall not be held responsible for counterfeit products.
- The manufacturer will update this manual according to product function enhancement or changes and regularly update the software and hardware described in this manual. Update information will be added to new versions of this manual without prior notice.
- This manual may contain misprints, technology information that is not accurate enough, or product function and operation description that is slightly inconsistent with the actual product, the final interpretation of company is as a standard.
- This manual is only for reference and does not ensure that the information is totally consistent with the actual product. For consistency, see the actual product.

NOTE

For more information, please refer to website.

1 Open Package Examination

Open the package, check the appearance of product for no obvious damage, and confirm the item list for table 1-1 is consistent.

Table 1-1 Packing list

Component	Quantity	Remark
Bullet Network Camera	1	
Quick Setup Guide	1	
Installation location sticker	1	
Accessory package	1	

2 Device Structure

2.1 Device Ports

NOTE

Different devices may have different ports and multi-head cable; Please refer to the actual product.

Figure2-1 Multi-head cable

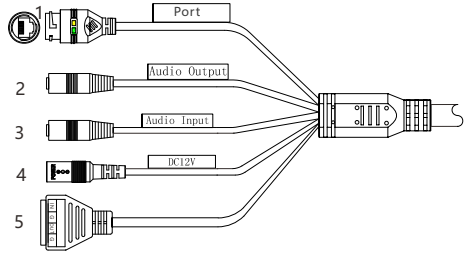

Table 2-1 Multi-head cable description

ID	Core	Description	Remark
1	Network access port	Connects to a standard Ethernet cable or PoE . The green light is on, the network connection is normal; the yellow light flashes when the data is transmitted. Some models maybe not have the lights; Please refer to the actual product.	Support PoE supply.
2	Audio output	Connects to an external audio device such as a speaker.	Applied for camera with audio function
3	Audio input port	Receives an analog audio signal from devices such as a sound pickup device.	
4	Power supply (DC 12V)	Connects to a 12V direct current (DC) power supply.	
5	G	Alarm output COM	Applied for alarm function
	OUT	Alarm output terminal	
	G	Alarm input COM	
	IN	Alarm input terminal	

2.2 Camera Dimensions

NOTE

Different devices may have different dimensions; Please refer to the actual product.

Figure 2-2 Dimensions (Unit: mm)

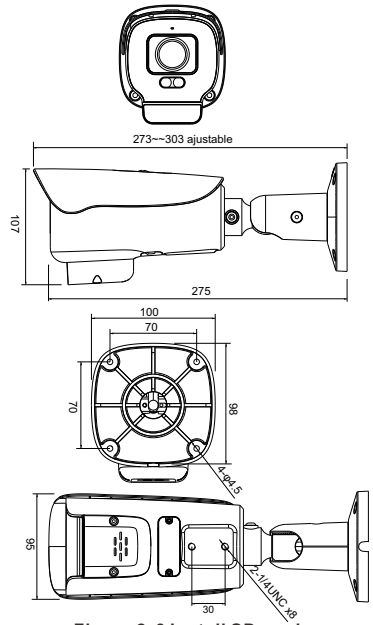

Figure 2-3 Install SD card

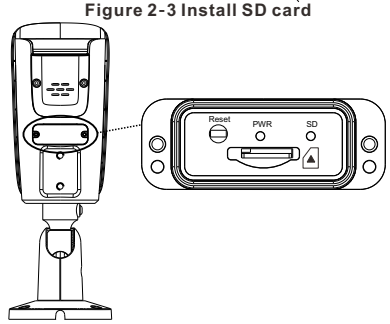

2.3 Fill light settings

Camera's fill light has four modes, they are intelligent dual light (current fill light will switch to warm light after an alarm is triggered, and will switch back to the original fill light for 30s after the alert is released.), warm light, infrared lamp and none (Close the fill light and the color of image will stay in previous mode).

The different cameras can be set different fill light modes, please set fill light modes according to the actual scene.

Day mode: It can be used in the scene with sufficient ambient light for 24 hours, do not turn on the fill light, and the image is in color.
Night mode: it can be used in the scene where there is insufficient ambient light for 24 hours, turn on the fill light (it can be selected according to the four modes of the fill light).
Auto mode: Automatically switch the fill light mode according to the luminance of the environment.
Timing mode: Set the start and end time of the day, this time period is day mode for camera.

NOTE

Different devices may have different fill lights; Please refer to the actual product.

3 Device Installation

The Bullet Network Camera can be installed on the column or wall. You can select an installation mode based on site requirements. If the camera is installed on a concrete wall, install the expansion bolts before installing the bracket. If the camera is installed on a wooden wall, use self-tapping screws to install the bracket directly.

Installation Steps:

Step 1 Stick the Installation location sticker on the ceiling or wall. Drill four holes based on the marks on the sticker. Drive the plastic anchors into the holes, Install the camera on the ceiling or wall and fix the screws as shown in figure 3-1.

Step 2 Connect the multi-connector cable.

NOTE

The wall where the support is mounted must be able to withstand at least three times of the total weight of the support and the camera.

You can route cables from the top or from the side. If you use the top routing method, drill a hole in the surface first. If you use the side routing method, please route the multi-head cable out from the side gap at the bottom of the camera.

Figure 3-1 Installing bracket

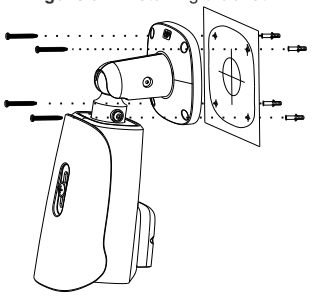

Step 3 Turn on the camera, connect the monitor, adjust the camera screen to the corresponding area. If user need to adjust the position of the camera, he can loosen the three-axis screws on bracket to manually adjust the position, then tighten the screws after finishing adjustment, as shown in figure 3-2.

Figure 3-2 Finish installation

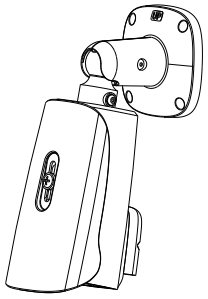

NOTE

During installation, please take care of the waterproofness of the bracket and line. Please make sure the head of line bend down then go upward, avoid the water go along the line into the bracket.

4 Quick Configuration(e.g IE)

4.1 Login

Step 1 Open the Internet Explorer, enter the IP address of IP camera (the default value: 192.168.0.120) in the address box, and press Enter. The login page is displayed as shown in figure 4-1 .

Step 2 Input the user name and password.

NOTE

The default user name and password are both admin. Modify the password when user logs into the system for the first time to ensure system security.

You can change the system display language on the login page.

Figure 4-1 Login

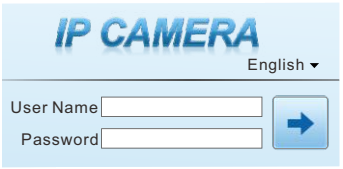

Step3 Click Login, the main page is displayed.

4.2 Modify IP address

Choose **Configuration** > **Device** > **Local Network**, the **Local Network** page is displayed.

Input the IP address in the IP Address box and click **Apply** as shown in figure 4-2.

After the IP address is set successfully, please use the new IP address to login the Web interface.

Figure 4-2 Local Network



4.3 Browsing Video

To ensure the real-time video can be played properly, you must perform the following operation when you login the web for the first time. If you can view the video immediately, please ignore it.

Step 1 The Internet Explorer. **Choose Tools** > **Internet options** > **Security** > **Trusted sites** > **Sites**, in the display dialog box, click **Add**, as shown in figure 4-3.

Step 2 In the Internet Explorer, choose **Tool** > **Internet Options** > **Security** > **Customer level**, and set **Download unsigned ActiveX control** and **initialize and script ActiveX controls not marked as safe for scripting under ActiveX controls and plug-ins to enable**, as shown in figure 4-4.

Figure 4-3 Adding a trusted site

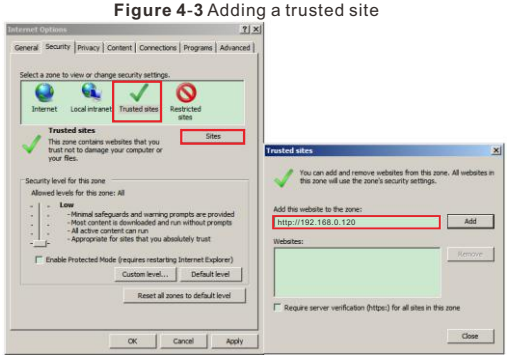

Step 2 In the Internet Explorer, choose **Tool** > **Internet Options** > **Security** > **Customer level**, and set **Download unsigned ActiveX control** and **initialize and script ActiveX controls not marked as safe for scripting under ActiveX controls and plug-ins to Enable**, as shown in figure 4-4.

Figure 4-4 Configuring ActiveX control and plug-in

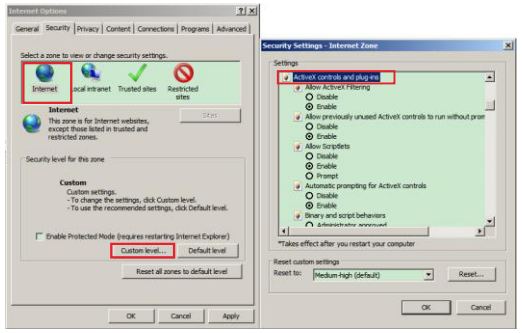

Step 3 Download and install the player control as prompted.

NOTE

If the repair tips displayed when installing the control , please ignore the prompt, and continue the installation, the login page is displayed when the control is loaded.

To browse a real-time video, click Live Video. The Live Video page is displayed, as shown in figure 4-5.

Figure 4-5 Live Video

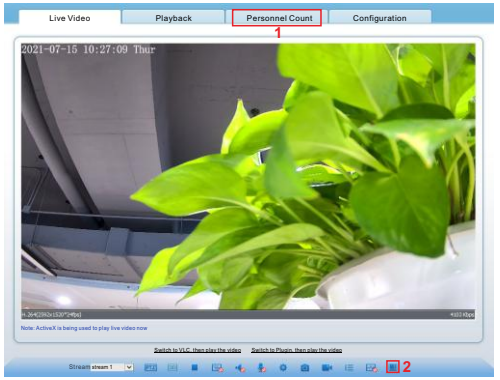

1 Personnel Count: User can query the data of personnel count, through year, month, day. The statistics can be downloaded. The data can be shown by line chart, histogram, list.

2 AI Live video: Click the icon to view the snapshots of human face or license plate (click “Face” or “Plate” to switch).
The bottom page will show the captured images of vehicle and human .

Figure 4-6 Installation of personnel count

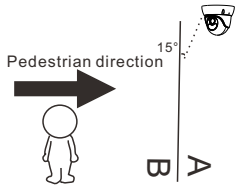

CAUTION

If user requires higher accuracy of personnel count, we recommend the user to install camera and draw the line following as figure 4-6.

4.4 Intelligent Analysis

At "Configuration > Intelligent Analysis" interface, user can set the parameters of Perimeter, Single Virtual Fence, Double Virtual Fence, Multi Loiter, Converse and Personnel Count, as shown in figure 4-7 .

Figure 4-7 Intelligent Analysis



4.5 AI Multi object

At “Configuration > AI Multi object” interface, user can enable face detection, full body detection, vehicle detection, set the other parameters of detection, as shown in figure 4-8.

Figure 4-8 AI Multi-object



NOTE

For better capture performance, it is recommended to use 6mm focus length lens or above.