SN-IPS8620TDR-Z25

2MP 25x IR PTZ Network Camera



Key Features

- 1/2.8" progressive scan CMOS
- 25x optical zoom,16x digital zoom
- 2MP(1920×1080) @ 25/30fps
- Support face, human and vehicle detection and capture
- Intelligent Analysis: intrusion, single line crossing, double line crossing, loitering, wrong way, illegal parking, people counting
- Auto tracking and perimeter protection based on deep learning
- WDR, 3D DNR, ICR, HLC, BLC, Defog
- Smart IR distance up to 150 m
- IP66

Specification

Camera	
Image Sensor	1/2.8” Progressive Scan CMOS
Max. Resolution	1080P (1920×1080)
Electronic Shutter	Auto/Manual, 1/5 ~ 1/20,000s
Min. illumination	Color: 0.05 Lux @ (F1.6, AGC ON) B/W: 0.001 Lux, 0 Lux (IR LED ON)
Day & Night	Auto (ICR)
IR Distance	Smart IR, Up to 150 m (492.1 ft)
IR On/Off Control	Auto/Manual
Lens	
Focal Length	5 ~ 125mm
Max. Aperture	F1.6 ~ F3.67
Angle of View	H: 57.02° ~ 3.36°, V: 33.14° ~ 1.91°
Optical Zoom	25x
Digital Zoom	16x
Focus Control	Auto/Manual/Semi-automatic
PTZ	
Pan/Tilt Range	Pan: 0° ~ 360° endless, Tilt: -10° ~ +90°
Manual Control Speed	Pan: 0.1° ~ 180°/s, Tilt: 0.1° ~ 90°/s
Preset Speed	Pan: 180°/s, Tilt: 90°/s
Presets	400
PTZ Mode	6 Track, 12 Scan, 12 Tour (up to 32 presets per tour)
3D Positioning	Support
Power-Off Memory	Support
PTZ Status Display	Support
Idle Motion	The time can be set (1-240 minutes), and functions such as preset positions, patrols, scans, and tracks can be run.
Video	
Streaming Capability	3 Streams
Stream/Frame Rate	Stream1: 1920×1080, 1280×720 @ 25/30fps Stream2: D1, VGA, 640×360, CIF, QVGA @ 25/30fps Stream3: VGA, CIF, QVGA @ 25/30fps
Bit Rate Control	CBR/VBR
Bit Rate	Stream1: 200kbps~12Mbps Stream2: 100kbps~6Mbps Stream3: 100kbps~3Mbps
Smart Encoder	Support
Region of Interest (ROI)	Support
Image	
Image Adjustment	Brightness, Sharpness, Contrast, Saturation adjustable
Mirror	Support
White Balance	Auto/Manual
Day/Night Setting	Auto, Day, Night, Time
Smart IR	Support
Noise Reduction	2D/3D DNR
Image Enhancement	HLC, BLC, Defog
Wide Dynamic Range	True WDR
S/N Ratio	55dB
Motion Detection	Support
Privacy Masking	Support
Audio	
Compression	G.711 (8kbps), RAW_PCM (16kbps)
Smart Function	
Multi-Object Detection	Support face, human, vehicle detection and capture
Intelligent Analysis	Intrusion, Single line crossing, Double line crossing, Loitering, Wrong way, Illegal Parking (the six functions support the accurate detection of vehicle and human), People counting
Auto Tracking	Support
Network	
Protocols	IPv4, IPv6, TCP / IP, HTTP, HTTPS, UPnP, RTSP / RTP / RTCP, IGMP / Multicast, SMTP, DHCP, NTP, DNS, DDNS, QoS, SNMP, 802.1X, UDP, ICMP, ARP, TLS
Interoperability	ONVIF, SDK, CGI
Streaming Method	Unicast
Max. User Access	10 Users
Web Viewer	<IE11, Chrome, Firefox, Microsoft Edge
Language	English, Chinese, Polish, Italian, Portuguese, Spanish, Russian, French, Czech, Hungarian. Default: English
Interface	
Network Interface	1 × RJ-45, 10/100 Mbps self-adaptive Ethernet port
Audio Interface	1ch Input, 1ch Output
Alarm Interface	2ch Input, 2ch Output
SD Card Slot	Yes (Built-in), up to 256GB
Electrical	
Power Supply	AC24V/DC36V/PoE+ (IEEE 802.3at) Standard Equipped: DC36V
Power Consumption	Less than 30 W
Operating Temperature	-40 °C ~ 60 °C (-40 °F ~ 140 °F)
Operating Humidity	Less than 90% RH
Ingress Protection	IP66, TVS4000V
Certifications	CE/FCC
Casing	Metal
Dimensions	ϕ173.2×292.6mm (ϕ6.82×11.52 inch)
Net Weight	3.5 kg (7.72 lb)

Dimensions (mm)

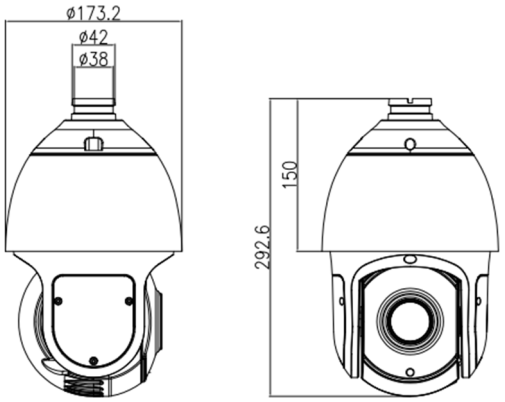

Accessories

Optional:



SN-BK606B
Wall Bracket



SN-BK607B
Ceiling Bracket



SN-BK605
Corner Mount



SN-BK604B
Pole Mount

©2022 Sunell all rights reserved. Design and specifications are subject to change without notice.