

Vandal Dome Network Camera Quick Setup Guide

NO:101-100-0517-02
Issue:1.2

Precautions

Fully understand this document before using this device, and strictly observe rules in this document when using this device. If you install this device in public places, provide the tip "You have entered the area of electronic surveillance" in an eye-catching place. Failure to correctly use electrical products may cause fire and severe injuries.

WARNING	It alerts you to moderate dangers which, if not avoided, may cause minor or moderate injuries.
CAUTION	It alerts you to risks. Neglect of these risks may cause device damage, data loss, device performance deterioration, or unpredictable results.
NOTE	It provides additional information.

WARNING

- Strictly observe installation requirements when installing the device. The manufacturer shall not be held responsible for device damage caused by users' non-conformance to these requirements.
- Strictly conform to local electrical safety standards and use power adapters that are marked with the LPS standard when installing and using this device. Otherwise, this device may be damaged.
- Use accessories delivered with this device. The voltage must meet input voltage requirements for this device.
- If this device is installed in places with unsteady voltage, ground this device to discharge high energy such as electrical surges in order to prevent the power supply from burning out.
- When this device is in use, ensure that no water or any liquid flows into the device. If water or liquid unexpectedly flows into the device, immediately power off the device and disconnect all cables (such as power cables and network cables) from this device.
- Do not focus strong light (such as lighted bulbs or sunlight) on this device. Otherwise, the service life of the image sensor may be shortened.
- If this device is installed in places where thunder and lightning frequently occur, ground the device nearby to discharge high energy such as thunder strikes in order to prevent device damage.

CAUTION

- Avoid heavy loads, intensive shakes, and soaking to prevent damages during transportation and storage. The warranty does not cover any device damage that is caused during secondary packaging and transportation after the original packaging is taken apart.
- Protect this device from fall-down and intensive strikes, keep the device away from magnetic field interference, and do not install the device in places with shaking surfaces or under shocks.
- Clean the device with a soft dry cloth. For stubborn dirt, dip the cloth into slight neutral cleanser, gently wipe the dirt with the cloth, and then dry the device.
- Do not jam the ventilation opening. Follow the installation instructions provided in this document when installing the device.
- Keep the device away from heat sources such as radiators, electric heaters, or other heat equipment.
- Keep the device away from moist, dusty, extremely hot or cold places, or places with strong electric radiation.
- If the device is installed outdoors, take insect- and moisture-proof measures to avoid circuit board corrosion that can affect monitoring.
- Remove the power plug if the device is idle for a long time.

Special Announcement

- All complete products sold by the manufacturer are delivered along with nameplates, quick setup guide and accessories after strict inspection. The manufacturer shall not be held responsible for counterfeit products.
- The manufacturer will update this manual according to product function enhancement or changes and regularly update the software and hardware described in this manual. Update information will be added to new versions of this manual without prior notice.
- This manual may contain misprints, technology information that is not accurate enough, or product function and operation description that is slightly inconsistent with the actual product, the final interpretation of company is as a standard.
- This manual is only for reference and does not ensure that the information is totally consistent with the actual product. For consistency, see the actual product.

NOTE

For more information, please refer to website.

1 Open Package Examination

Open the package, check the appearance of product for no obvious damage, and confirm the item list for table 1-1 is consistent.

Table 1-1 Packing list

Component	Quantity	Remark
Vandal Dome Network Camera	1	
Quick Setup Guide	1	
T15 Screw driver	1	Large Dome
T10 Screw driver	1	Mini Dome
Installation location sticker	1	
Stainless self-tapping screw	3	
Plastic anchor	3	
Network access port protective cover	1	
Waterproof rubber seal	1	
Terminal block	1	Optional
Phillips stainless screw (install on bracket)	3	

2 Device Structure

2.1 Device Ports

NOTE

Len adjustment is only applied for large dome.

Figure 2-1 Lens adjustment

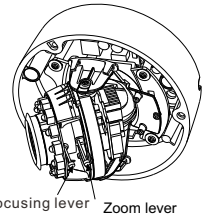

Table 2-1 Lens adjustment description

Port Name	Description
Focusing lever	Adjust the focus of lens, the default status is lock.
Zoom lever	Adjust the lens focal length, the default status is lock.

NOTE

Different devices may have different multi-heads; Please refer to the actual product.

Figure2-2 Multi-head cable 1

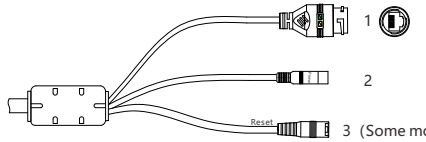

Table 2-2 Multi-head cable description

ID	Core	Description	Remark
1	Network access port	Connects to a standard Ethernet cable or PoE . The green light is on, the network connection is normal; the yellow light flashes when the data is transmitted. Some models maybe not have the lights; Please refer to the actual product.	Support PoE supply.
2	Power supply (DC 12V)	Connects to a 12V direct current (DC) power supply.	
3	Reset button	Long press the button for 5 seconds to restore the original settings.	

Figure2-3 Multi-head cable 2

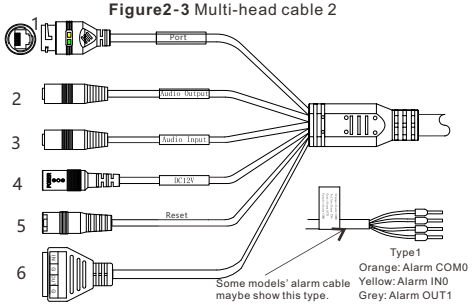

Table 2-3 Multi-head cable 2 description

ID	Core	Description	Remark
1	Network access port	Connects to a standard Ethernet cable or PoE . The green light is on, the network connection is normal; the yellow light flashes when the data is transmitted. Some models maybe not have the lights; Please refer to the actual product.	Support PoE supply.
2	Audio output	Connects to an external audio device such as a speaker.	Applied for camera with audio function
3	Audio input port	Receives an analog audio signal from devices such as a sound pickup device.	
4	Reset botton	Long press the reset button for 5 seconds to restore the original settings.	
5	Power supply (DC 12V)	Connects to a 12V direct current (DC) power supply.	
6	G	Alarm output COM	Applied for alarm function
	OUT	Alarm output terminal	
	G	Alarm input COM	
	IN	Alarm input terminal	

2.2 Camera Dimensions

NOTE

Different devices may have different dimensions; Please refer to the actual product.

Figure 2-4 Dimensions of Mimi Dome (Unit:mm)

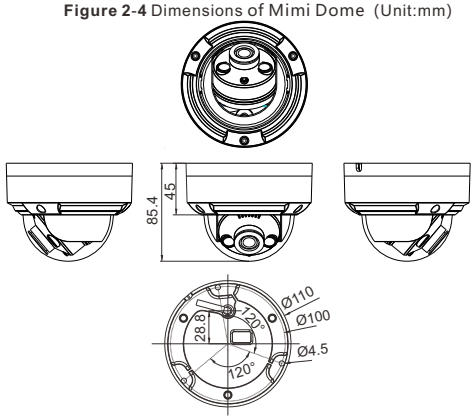

Figure 2-5 Dimensions of Large Dome(Unit:mm)

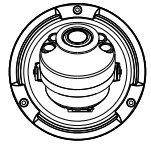

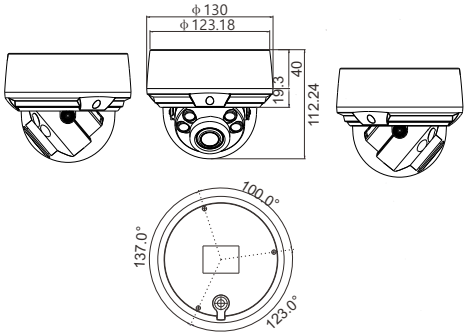

3 Device Installation

WARNING

To avoid moisture influence, install the dome cover at least half an hour after the camera is installed and powered on.

The vandal dome camera can be installed in the ceiling , wall , wall bracket or ceiling bracket. This section describes how to install the camera in the ceiling.

Installation Steps:

Step 1 Use the T screw driver in the accessory package to unscrew the three screws on the dome cover. The camera is opened, as shown in figure 3-1.

Figure 3-1 Opening camera

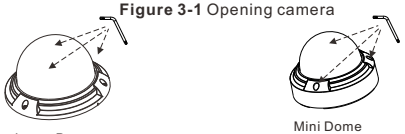

Large Dome Mini Dome

Step 2 Stick the Installation location sticker on the ceiling or wall. Drill three holes based on the marks on the sticker. Drive the plastic anchors into the holes.

Step 3 Fetch three black self-tapping screws from the accessory package. Then fix the screws to fasten the camera on the ceiling as shown in figure 3-2.

Figure 3-2 Installing housing

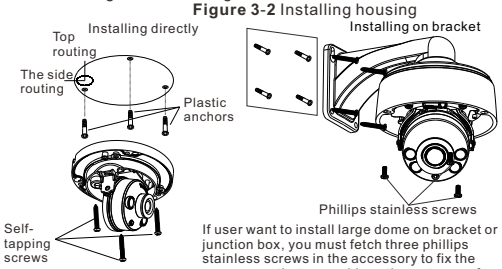

If user want to install large dome on bracket or junction box, you must fetch three phillips stainless screws in the accessory to fix the camera, so that can achieve the waterproof effect. As shown in figure 3-2.

Step 4 Connect the network access port and power supply of the multi-head cable.

Step 5 Adjust the lens focal length and video angle range.

1.Press the arrows marked on the lining to remove the lining aside, as shown in figure 3-3.

Figure 3-3 Removing lining

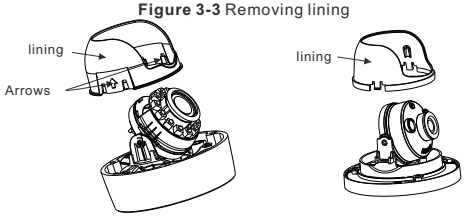

Large dome with lining Mini dome

2.View the video, loosen the slotted screw slightly as shown in figure 3-4 & figure 3-5, make camera's triaxial adjustments, adjust the screen to the scene you want to monitor, and then tighten the screws. Three-axis adjustment direction and angle are shown in figure 3-4 and figure 3-5.

Figure 3-4 Three-axis adjustment

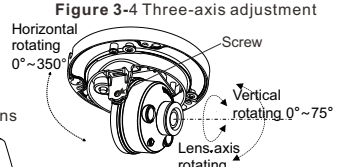

Figure 3-5 Adjusting lens

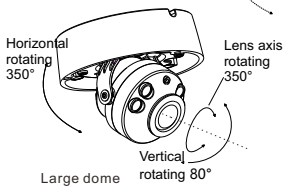

Figure 3-6 Installing SD card

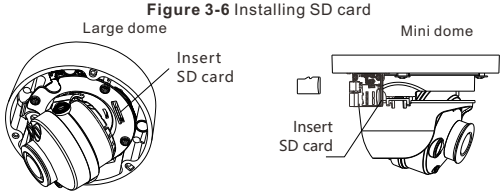

Step 6 Loosen the focus lever, and gently move the zoom lever to adjust the lens focal length to the desired position. Move the focus lever slightly to focus the lens clearly. Tighten the focus lever after completing the focusing operation, as shown in figure 3-4(This step is only applied for large dome).

NOTE

- Some models maybe not operate so much steps; Please refer to the actual product.
- While focusing lever is in the process of focusing, an image might be blur, move the zoom lever to fine-tune the image, when image is clear, lock the zoom lever.
- If the lens of camera is auto focus lens, set the focus value in **Sensor > Lens control** page in the web page.

Step 7 Assemble the lining with the main body and buckle the four button placements with the main body bracket. Aim the two screws hole with boss at the groove on the main body. Then fasten the dome cover , as shown in figure 3-6.

Figure3-7 Assembling lining and cover

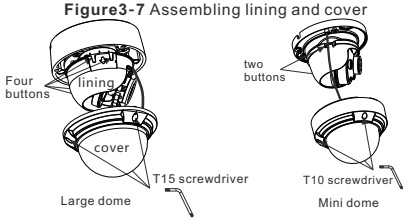

4 Quick Configuration(e.g IE)

4.1 Login

Step 1 Open the Internet Explorer, enter the IP address of IP camera (default value: 192.168.0.120) in the address box, and press Enter. The login page is displayed as shown in figure 4-1.

Step 2 Input the user name and password.

NOTE

- The default user name is admin. The default password is admin. Change the password when user logs into the system for first time to ensure system security.
- It is advised to restart the device three minutes later after modifying password to ensure modified successfully.
- You can change the system display language on the login page.

Figure 4-1 Login

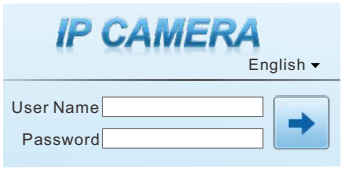

Step3 Click Login, the main page is displayed.

4.2 Modify IP address

Choose **Configuration > Device > Local Network**, the **Local Network** page is displayed.

Enter the IP address in the IP Address box and click **Apply** as shown in figure 4-2.

After the IP address is set successfully, please use the new IP address to log in the Web interface.

Figure 4-2 Local Network

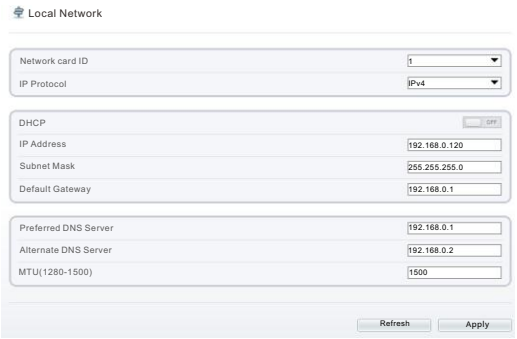

4.3 Browsing Video

To ensure the real-time video can be played properly, you must perform the following operation when you log in the web for the first time:

Step 1 the Internet Explorer. **Choose Tools** > **Internet options** > **Security** > **Trusted sites** > **Sites**, in the display dialog box, click **Add**, as shown in figure 4-3.

Figure 4-3 Adding a trusted site

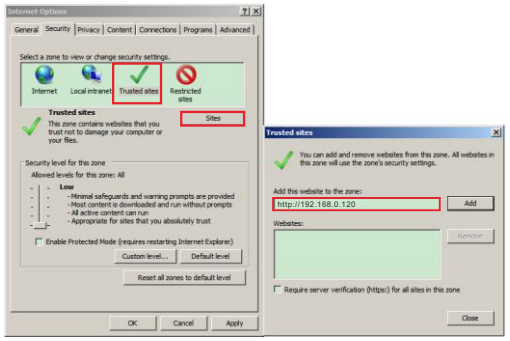

Step 2 In the Internet Explorer, choose **Tool** > **Internet Options** > **Security** > **Customer level**, and set **Download unsigned ActiveX control** and **initialize and script ActiveX controls not marked as safe for scripting under ActiveX controls and plug-ins to Enable**, as shown in figure 4-4.

Step 3 Download and install the player control as prompted.

NOTE

If the repair tips displayed when installing the control , please ignore the prompt, and continue the installation, the login page is displayed when the control is loaded.

Figure 4-4 Configuring ActiveX control and plug-in

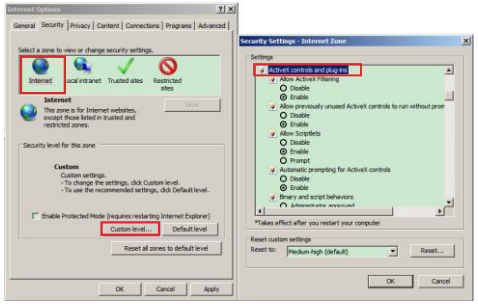

To browse a real-time video, click Live Video. The Live Video page is displayed, as shown in figure 4-5.

Figure 4-5 Live Video

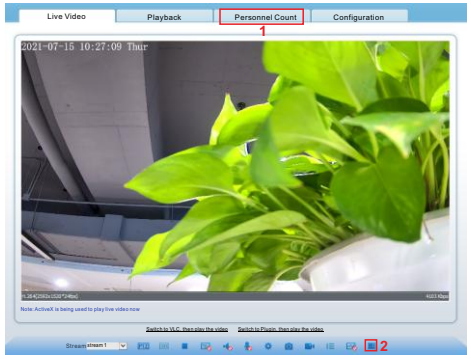

1 Personnel Count: User can query the data of personnel count, through year, month, day. The statistics can be downloaded. The data can be shown by line chart, histogram, list.

2 AI Live video: Click the icon to view the snapshots of human face or license plate (click “Face” or “Plate” to switch).

The bottom page will show the captured images of vehicle and human face.

Figure 4-6 Installation of personnel count

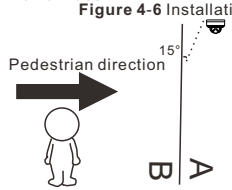

CAUTION

If user requires higher accuracy of personnel count, we recommend the user to install camera and draw the line following as figure 4-6. For better capture performance, it is recommended to use 6mm focus length lens or above.

4.4 Intelligent Analysis

At "Configuration > Intelligent Analysis" interface, user can set the parameters of Perimeter, Single Virtual Fence, Double Virtual Fence, Multi Loiter, Converse and Personnel Count, as shown in figure 4-7 .

Figure 4-7 Intelligent Analysis

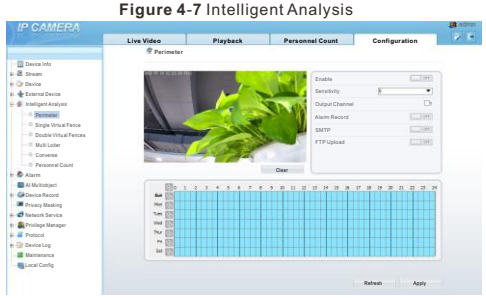

4.4 AI Multi object

At “Configuration > AI Multi object” interface, user can enable face detection, full body detection, vehicle detection, set the other parameters of detection.