SN-M2207NT-D-B

Face Recognition Terminal



Key Features

- Non-contact temperature measurement
- Temperature measuring range: 28 °C to 42 °C (82.4 °F to 107.6 °F)
- Temperature measuring accurate to 0.1, accuracy: ± 0.3°C
- Temperature measuring distance: 0.5 to 1.2 m, response speed: ≤ 100ms
- Face recognition distance: 0.3 to 2.0 m
- Voice prompt will be triggered and door status (open/close) can be configured when detecting abnormal temperature
- Face recognition duration ≤ 0.2 s per face, face recognition accuracy rate ≥99.8%
- 30,000 face capacity, 60,000 event capacity
- Displays temperature measurement results on the authentication page
- 7-inch LCD touch screen, video lag-free, ghost-free
- Suggested height for face recognition: between 1.2 m and 2.2 m
- Support I/O, WG26, WG34, WG36, WG37, WG50, RJ45, USB, Door lock interfaces

Specification

Temperature Measurement	
Temperature Range	28 °C to 42 °C (82.4°F to 107.6°F)
Sensor	Uncooled Microbolometer
Resolution	120×90
Measurement Accuracy	±0.3℃, Environment temperature: 20℃ ~ 35℃ (68°F ~ 95°F), No airflows indoor
Accuracy Decimal Place	0.1
Measuring Distance	0.5 to 1.2 m (1.64 to 3.94 ft)
Response Speed	≤ 100ms
Basic	
Display	7-inch LCD touch screen, Resolution: 600×1024
Camera	Dual-lens
Sensor	1/2.8" 2MP Progressive Scan CMOS
WDR	120dB
Light Compensation	Auto white light, Auto IR light (850 nm)
Storage Capacity	RAM: 1GB, EMMC: 8GB
Function	
Authentication Mode	Face, Body temperature, Mask Detection optional
Face Recognition Distance	0.3 to 2.0 m (0.98 to 6.56 ft)
Face Anti-Spoofing	Support
Audio Prompt	Support
Face Recognition Accuracy	≥ 99.8%
Face Recognition Time	≤ 0.2 s
Face Image Capacity	30,000
Record Capacity	60,000 event capacity
Interface	
Ethernet	1 RJ45 10M/100M Ethernet port
Alarm	3-ch alarm input, 1-ch alarm output
Wiegand Input	1 (Support peripheral card reader)
Wiegand Output	1 (WG26, WG34)
USB	1 USB2.0 port
Door Lock Output	1 (Switch quantity)
General	
Power Supply	12V 2A DC
Power Consumption	Max 8 W
Working Temperature	0 °C to 50 °C (32 °F to 122 °F) For temperature measurement: 20℃ ~ 35℃ (68° F ~ 95° F)
Working Humidity	0～90%, no condensing
Dimensions (L× W×H)	120 × 28 × 256 mm (4.72 × 1.10 × 10.08 inch)
Net Weight	1 kg (2.2 lb)

Dimensions (mm)

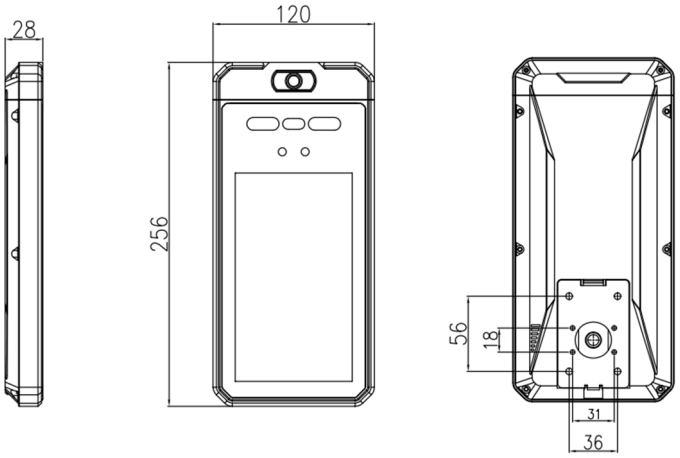

Interface

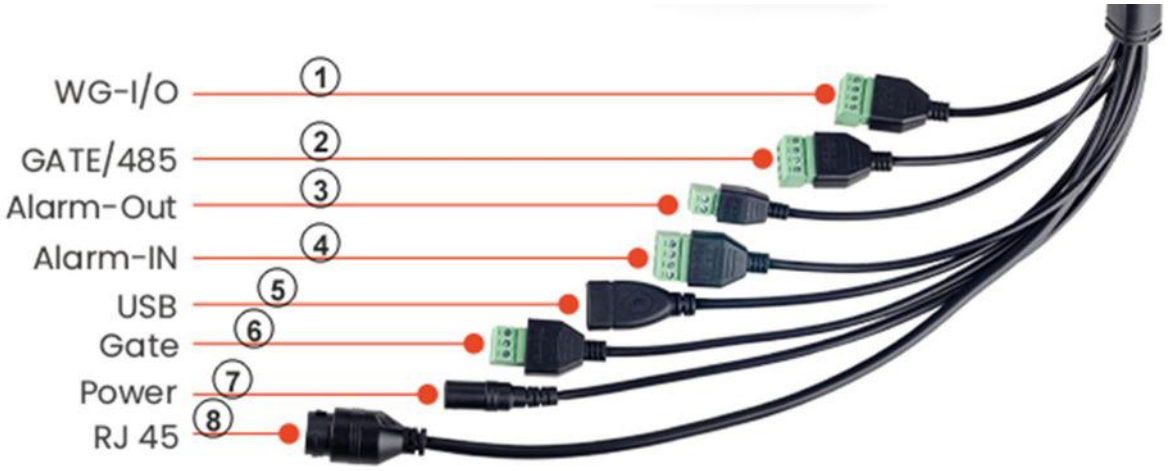

No.	Interface	Number	Notes
1	WG I/O	1	Wiegand control interface and DC12V Power output interface
2	GATE/485	1	1-ch switching signal output and RS485 interface (reserved)
3	Alarm Out	1	1-ch alarm output interface
4	Alarm In	1	3-ch alarm input interface
5	USB	1	ID card reader (USB 2.0)
6	Gate	1	Door lock switching signal,
7	Power	1	Power Connector
8	RJ45	1	Network interface

©2022 Sunell all rights reserved. Design and specifications are subject to change without notice.