SN-TPT4233LZ-M

Bispectral PTZ Network Camera



Key Features

- Uncooled Microbolometer sensor with 400×300 resolution
- 25/50 mm motorized focus thermal lens optional
- Support 3 temperature measurement rule types (Spot, Line, Area)
- Support human and vehicle detection
- Smart detection: intrusion, single line crossing, double line crossing, loitering, wrong way, people counting, enter area, leave area
- Reliable temperature-anomaly alarm
- Temperature measurement: -20°C ~ 150°C (-4°F ~ 302°F)
- 1 RJ45 port with 2 IP addresses
- Power off self-locking, strong wind resistance
- Anti-frozen, IP66

Specification

Thermal Camera		
Image Sensor	Uncooled VOx Focal Plane Arrays	
Resolution	Sensor is 400×300. Image can be scaled up to 704×576	
Pixel Pitch	17 um	
Thermal Sensitivity (NETD)	≤40mK	
Spectral Range	8 ~ 14 um	
Image Setting	Brightness, Sharpness, Contrast, Mirror, FFC control, 2D/3D DNR	
Pseudo-color Setting	White-hot/Black-hot/Rainbow/Ironbow etc. up to 17 modes	
Thermal Lens		
DVE Image Enhance	Support	
Lens Type	Fixed	
Focus Control	Motorized Focus	
Focal Length	25 mm	50 mm
F No.	F1.0	F1.0
Angle of View	H:15.4°, V:11.6°	H: 7.7°, V:5.8°
Detection Distance Fire(1*1m)	735 m	1471 m
Detection Distance Man(1.8*0.5m)	735 m	1471 m
Detection Distance Vehicle(4*1.5m)	2255 m	4510 m
Recognition Distance Man(1.8*0.5m)	184 m	368 m
Recognition Distance Vehicle(4*1.5m)	564 m	1127 m
Visible Camera		
Image Sensor	1/2.8" Sony CMOS	
Max. Resolution	2592 (H)×1520 (V)	
Shutter Speed	1/5 ~ 1/20,000s	
Min. Illumination	Color: 0.01 Lux @ (F1.2, AGC ON), B/W: 0.001 Lux	
S/N Ratio	More than 55 dB	
Focal Length	5.3 ~ 159mm	
Max Aperture	F1.6 ~ F4.3	
Angle of View	H: 55° ~ 2.3°, V: 41.6° ~ 1.7°	
Optical Zoom	30x	
Focus Control	Auto/Manual/Semi-automatic	
Mirror	Support	
Defog	Support	
Privacy Masking	Support	
PTZ		
Pan/Tilt Range	Pan: 0° ~ 360° endless, Tilt: +90° ~ -90°	
Pan/Tilt Speed	Pan: 0.01° ~ 60°/s, Tilt: 0.01° ~ 30°/s	
Wiper	Support	
Preset Accuracy	± 0.1°	
Presets	400	
Scan	8 scans, up to 32 presets per scan	
Patrol	12 patrols, up to 32 presets per scan	
Track	6 tracks	
3D Positioning	Support	
Speed Setup	Auto/Manual (0-8)	
Power Off Memory	Support	
Idle Motion	It can activate Preset/ Scan/Tour/Pattern if there is no command in the specified period	
Video and Audio		
Main Stream	Visible: 2592×1520, 1920×1080, 1280×720 @25/30fps Thermal: D1 @25/30fps	
Sub Stream	Visible: D1, VGA, CIF @25/30fps Thermal: CIF @25/30fps	
Bit Rate Control	CBR/VBR	
Bit Rate	Visible: main stream: 200Kbps~12Mbps, sub stream: 100Kbps~6Mbps Thermal: main stream:100Kbps~6Mbps, sub stream: 10Kbps~1.5Mbps	
Region of Interest	Off/On (8 Zone, Rectangle)	
Audio Compression	G.711 (8kbps), RAW_PCM (16kbps)	
Smart Function		
Smart Detection	Support human and vehicle detection	
Intelligent Analysis	Intrusion, Single line crossing, Double line crossing, Loitering, Wrong way, Enter area, Leave area Support alarm triggering by specified target types (human and vehicle)	
Temperature Detection		
Temperature Detection	3 temperature measurement rule types (spot, line, area)	
Temperature Alarm	Over temperature alarm, Temperature difference alarm	
Accuracy	±2℃ / ±2%	
Response Time	≤ 30ms	
Temperature Measurement Range	-20°C ~ 150°C (-4°F ~ 302°F)	
Network		
Protocols	IPv4/IPv6 ,HTTP,RTSP/RTP/RTCP, TCP/UDP, DHCP, DNS, PPPOE, SMTP, SIP ,802.1x	
Interoperability	ONVIF, CGI, SDK	
Max. User Access	10 Users	
Web Viewer	<IE11, Chrome, Firefox, Microsoft Edge	
Web Language	English, Chinese, Polish, Italian, Portuguese, Spanish. Russian, French, Czech, Hungarian	
Interface		
Network Interface	1 Ethernet (10/100 Base-T) RJ-45 Connector	
Audio Interface	2ch Audio In, 2ch Audio Out	
Alarm Interface	9ch Alarm In, 4ch Alarm Out	
RS485	Support	
CVBS Interface	1ch output	
Reset Button	Support (Built-in)	
SD Card Slot	Built-in, up to 256GB	
General		
Power Supply	DC36V	
Power Consumption	Max 80 W	
Working Temperature	-40°C~60°C (-40°F~140°F)	
Storage Conditions	0 ~ 90% RH	
Certifications	CE /FCC	
Ingress Protection	IP66	
Casing	Metal	
Dimensions	282×419×316mm (11.1 × 16.5 × 12.44 inch)	
Net Weight	16.5Kg (Contains 25 mm lens) (36.8 lb)	

Dimensions (mm)

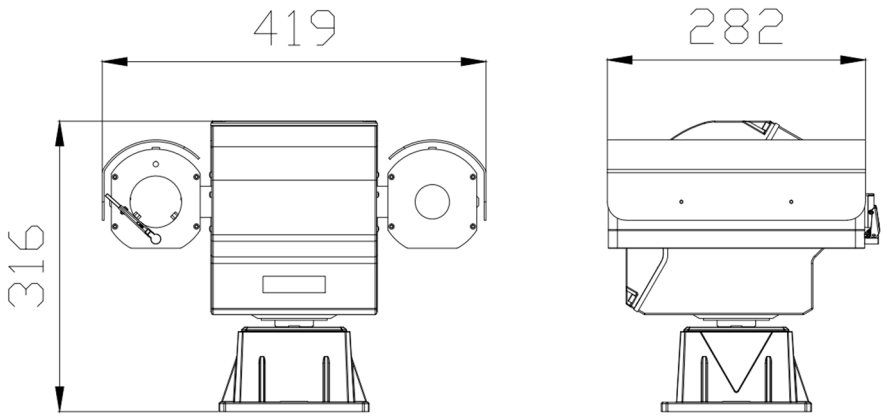

©2022 Sunell all rights reserved. Design and specifications are subject to change without notice.