SN-TPT4233QF-M

Bispectral Mini PTZ Network Camera



Key Features

- Uncooled VOx Micro bolometer with 400×300 resolution
- Sensitivity ≤40mK
- 25 mm motorized focus thermal lens
- Support 3 temperature measurement rule types (spot, line, area)
- Reliable temperature-anomaly alarm
- Support human and vehicle detection
- Intelligent analysis: intrusion, single line crossing, double line crossing, loitering, wrong way, enter area, leave area
- Temperature measurement range: -20°C ~ 150°C (-4°F ~ 302°F)

Specification

Thermal Camera	
Image Sensor	Uncooled VOx Focal Plane Arrays 400×300
Resolution	Sensor is 400×300. Image can be scaled up to 704×576
Pixel Pitch	17 um
Thermal Sensitivity (NETD)	≤ 40 mK
Spectral Range	8 ~ 14 um
Image Setting	Brightness, Sharpness, Contrast, Mirror, FFC control, 2D/3D DNR
Pseudo-color Setting	White-hot/Black-hot/Rainbow/Ironbow etc. up to 17 modes
Thermal Camera	
Lens Type	Fixed
Focus Control	Motorized Focus
Focal Length	25 mm
F No.	F1.0
Angle of View	H:15.4°, V:11.6°
Detection Distance Fire(1*1m)	735 m
Detection Distance Man(1.8*0.5m)	735 m
Detection Distance Vehicle(4*1.5m)	2255 m
Recognition Distance Man(1.8*0.5m)	184 m
Recognition Distance Vehicle(4*1.5m)	564 m
Visible Camera	
Image Sensor	1/2.8" Sony CMOS
Effective Resolution	2592 (H)×1520 (V)
Shutter Speed	1/5 ~ 1/20,000s
Min. Illumination	Color: 0.01 Lux @ (F1.2, AGC ON), B/W: 0.001 Lux
S/N Ratio	More than 55 dB
Focal Length	5.3 ~ 159 mm
Max Aperture	F1.6 ~ F4.3
Angle of View	H:55° ~ 2.3°, H: 41.6° ~ 1.7°
Optical Zoom	30x
Digital Zoom	16x
Focus Control	Auto/Manual/Semi-automatic
Mirror	Support
Defog	Support
Privacy Masking	Support
Illumination Distance	Up to 30m (98.4 ft, White)
PTZ	
Pan/Tilt Range	Pan: 0° ~ 360° endless, Tilt: +90° ~ -90°
Pan/Tilt Speed	Pan: 0.01° ~ 30°/s, Tilt: 0.01° ~ 10°/s
Wiper	Support
Preset Accuracy	± 0.1°
Presets	400
Scan	8 scans, up to 32 presets per scan
Patrol	12 patrols, up to 32 presets per scan
Track	6 tracks
3D Positioning	Support
Speed Setup	Auto/Manual (0-8)
Power Off Memory	Support
Idle Motion	It can activate Preset/ Scan/Tour/Pattern if there is no command in the specified period
Video and Audio	
Main Stream	Thermal: 704×576 @25/30fps Visible: 2592×1520, 1920×1080, 1280×720 @25/30fps
Sub Stream	Thermal: CIF @25/30fps Visible: D1, VGA, CIF @25/30fps
Bit Rate Control	CBR/VBR
Bit Rate	Thermal: main stream:100Kbps~6Mbps, sub stream: 10Kbps~1.5Mbps Visible: main stream: 200Kbps~12Mbps, sub stream: 100Kbps~6Mbps
Region of Interest	Off/On (8 Zone, Rectangle)
Smart Function	
Smart Detection	Support human and vehicle detection
Intelligent Analysis	Intrusion, Single line crossing, Double line crossing, Loitering, Wrong way, Enter area, Leave area Support alarm triggering by specified target types (human and vehicle)
Temperature Detection	
Temperature Detection	Support 3 temperature measurement rule types (Spot, Line, Area)
Temperature Alarm	Over temperature alarm, Temperature difference alarm
Accuracy	±2℃ / ±2%
Response Time	≤ 30ms
Temperature Measurement Range	-20°C ~ 150°C (-4°F ~ 302°F)
Network	
Protocols	IPv4/IPv6, RTSP/RTP/RTCP, TCP/UDP, HTTP, DHCP, DNS, FTP, DDBS, PPPOE, SMTP, 802.1x
Interoperability	ONVIF, CGI, SDK
Max. User Access	10 Users
Web Viewer	<IE11, Chrome, Firefox, Microsoft Edge
Web Language	English, Chinese, Polish, Italian, Portuguese, Spanish. Russian, French, Czech, Hungarian
Interface	
Network Interface	2 Ethernet (10/100 Base-T) RJ-45 Connector
Audio Interface	1ch input, 1ch output
Alarm Interface	1ch output
RS485	Support
CVBS Interface	1ch output
Reset Button	Support (Built-in)
SD Card Slot	Built-in, up to 256GB
General	
Power Supply	DC24V
Power Consumption	Static: <15W, Motion: <35W, Max 55 W
Working Temperature	-30°C ~ 60°C (-22°F ~ 140°F)
Storage Conditions	0 ~ 90% RH
Certifications	CE /FCC
Ingress Protection	IP66
Casing	Metal
Dimensions	323 ×192.5 ×177 mm (12.7 × 7.58 × 6.97 inch)
Net Weight	5 kg (11.0 lb)

Dimensions (mm)

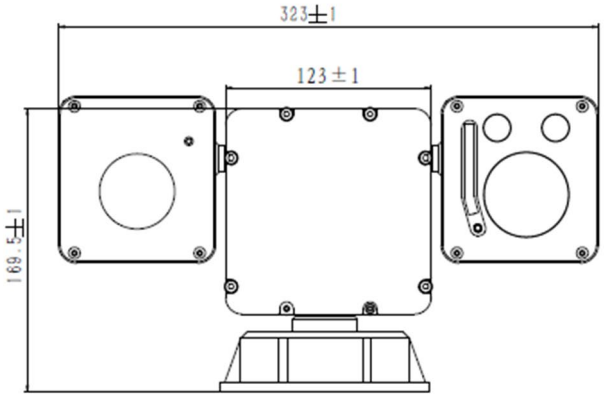

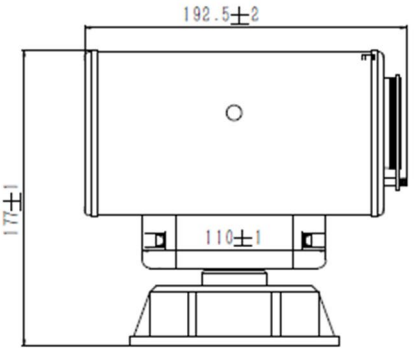

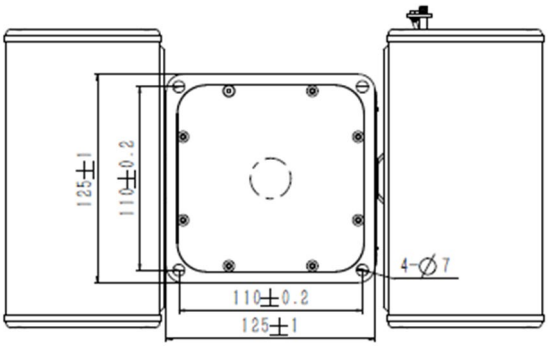

©2022 Sunell all rights reserved. Design and specifications are subject to change without notice.