GRAB BARS

130° angled grab bar



15.111.W, 15.114.W
white epoxy



15.211.S, 15.212.S, 15.213.S
stain finish



15.211.ST
stain finish

·130° angled grab bar, with snap flange cover.
·**15.111.W.** made of steel, white epoxy.
·**15.211.S, 15.211.ST.** made of AISI 304 stainless steel, satin finish.
·Recommended for use in bathrooms and showers.
·Suitable for bathrooms adapted to disabled.
·32mm diameter bar for easier gripping.
·Highest durability and rusting resistance.
·Other models available: 225x225 mm / 350x350 mm / 400x400 mm.

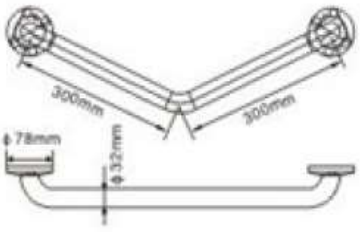

COMPONENTS & MATERIALS

·Two fixing points.
·Distance from bar to wall: 80 mm.
·Ø32 mm tube grab. Steel thickness: 1,2 mm.
·Incorporates 3 screws holes for wall mounting.
·**15.111.W, 15.211.S.** with 2 anchoring points.
·**15.211.ST.** with 3 anchoring points.

15.111.W	300x300mm
15.114.W	225x225mm
15.211.S	300x300mm
15.212.S	350x350mm
15.213.S	400x400mm

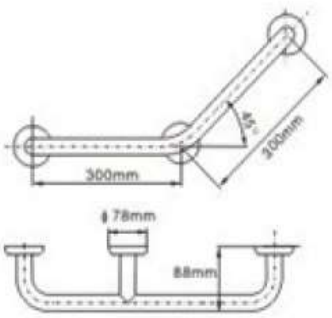

15.211.ST 300x300mm

TECHNICAL SPECIFICATIONS

Bar tube	Ø32 mm
Bar tube thickness	1.2 mm
Snap flange cover	Ø78 mm
Snap flange cover thickness	1.2 mm

Tel: +86 571 888 685 70 Fax: +86 571 888 685 71
hotec@cnhotec.com www.cnhotec.com