GRAB BARS

Straight bars



15.101.W, 15.104.W, 15.106.W (white finish)

·Straight grab bar to fix to wall.
·Suitable for specific bathrooms for people with mobility problems, elderly people or the handicapped.
·Suitable for both home and public use.
·Highest durability and rusting resistance.
·Stainless steel nuts and volts for masonry walls.

COMPONENTS & MATERIALS

·Made of steel, white epoxy finish.
·Two fixing points.
·Distance from bar to wall: 70 mm.
·Ø32 mm tube grab. Steel thickness: 1,2 mm.
·Incorporates 3 screws holes for wall mounting.

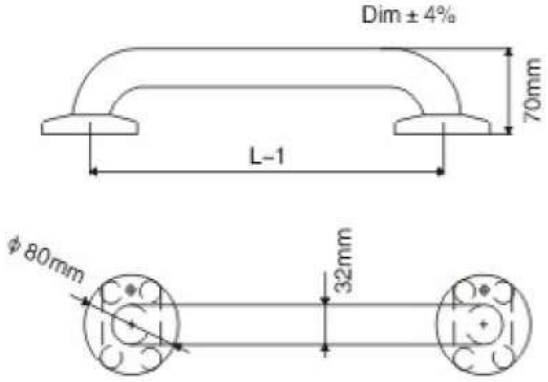

TECHNICAL SPECIFICATIONS

Dimension	see version table
Bar tube	Ø32 mm
Bar tube thickness	1.2 mm
Snap flange cover	Ø80 mm
Snap flange cover thickness	1.2 mm

	L-1
15.101.W	300mm (12")
15.104.W	450mm (18")
15.106.W	600mm (24")

Tel: +86 571 888 685 70 Fax: +86 571 888 685 71
hotec@cnhotec.com www.cnhotec.com