HOTEC

HAND DRYER

SENSOR OPERATED	JET
	
Reference: 11.109 white	Reference: 11.110 silver grey

COMPONENTS & MATERIALS

·High-impact ABS one-piece cover.
·High speed self-developed brushless motor.
·3 IR sensors in both sides for automatic hands detection.
·HEPA filter which avoids the entry of the tiny particles.
·Internal tank to collect the water and avoid a mess.
·Designed for high traffic bathroom and continuous use.
·Easy maintenance.
·Dimension: 566 high x 296 wide x 164 deep mm.

TECHNICAL SPECIFICATIONS

· **Material**	ABS
· **Cover thickness**	3.0 mm thick
· **Voltage/Frequency**	AC220V, 50/60Hz
· **r.p.m.**	21500
· **Total power**	1300-1800W
· **Motor power**	500-700W
· **Heating element power**	800-1100W
· **Air velocity**	85-105m/s
· **Air temperature**	25-40℃
· **Noice level**	60dB
· **Protection level**	IPX4
· **Drying time**	5-10s

CERTIFICATE

CE RoHS

TECHNICAL DRAWING

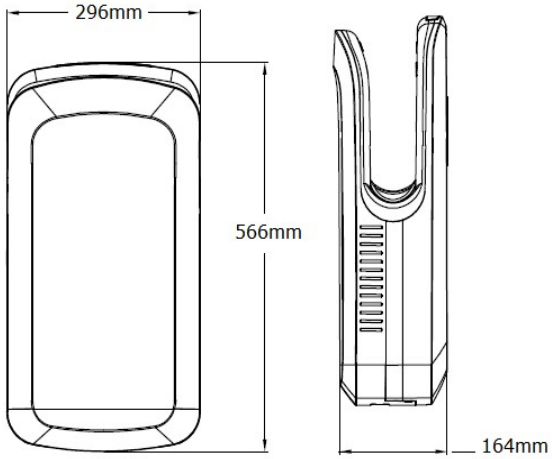

Tel: +86 571 888 685 70 Fax: +86 571 888 685 71
hotec@cnhotec.com www.cnhotec.com