HOTEC

**AUTOMATIC SANITARY WARE**

Automatic sensor faucet ITEM: 19.103







**COMPONENTS & MATERIALS**

·Touchless sensor faucet, surface mounted.
·Highest durability and rusting resistance.
·Easy install and maintenance.
·Suitable for hotel bathrooms.
·Saving water.

**TECHNICAL SPECIFICATIONS**

·Made of high quality brass, chrome finish.
·DC/AC
·Powered with 4 "AA" batteries of 1,5 V. Life: 1 year.
(based on 200 cycles one day.)
·Suitable water pressure: 0.05-0.6 MPa
·Ambient temperature: 0-45 ℃
·Ambient humidity: ＜95%RH
·Dia.of inlet pipe: G1/2" (DN15)
·Dia.of outlet pipe: G1/2" (DN15)
·Degree of protection by enclosure: IP56
·Detection zone: 6-25cm. Preset 15 cm. The date based on 30x30 cm standard white board.
·Equipped with fixing materials.

**TECHNICAL SPECIFICATIONS**

Power: DC/AC
Suitable water pressure 0.05-0.6 MPa
Degree of protection by enclosure IP56

**TECHNICAL DRAWING**

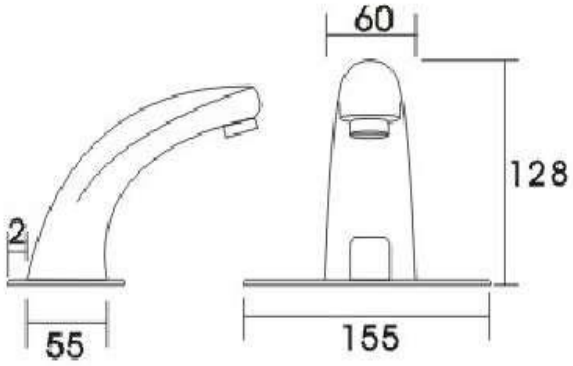


Tel: +86 571 888 685 70 Fax: +86 571 888 685 71
hotec@cnhotec.com www.cnhotec.com