GRAB BARS

Vertical swing up grab bar



15.224.S
satin finish

·Vertical swing-up grab bar with roll holder hock to place next to the toilet.
·It consists of a "U" shape tube, a paper roll holder and aheavy-duty wall plate, 3 mm thick.
·Safety swing-up position that locks the bar in verticalposition.
·Made of AISI 304 stainless steel, satin finish.
·Recommended for use in bathrooms and showers.
·Suitable for bathrooms adapted to disabled.
·32mm diameter bar for easier gripping.
·Highest durability and rusting resistance.

COMPONENTS & MATERIALS

·Ø32 mm tube grab. Steel thickness: 1,2 mm.
·Stainless steel screws and volts for masonry walls.
·Incorporates 6 screws holes for wall mounting.
·With brake and paper holder.

TECHNICAL SPECIFICATIONS

Bar tube	Ø32 mm
Bar tube thickness	1.2 mm
Mounting flange	100x300 mm

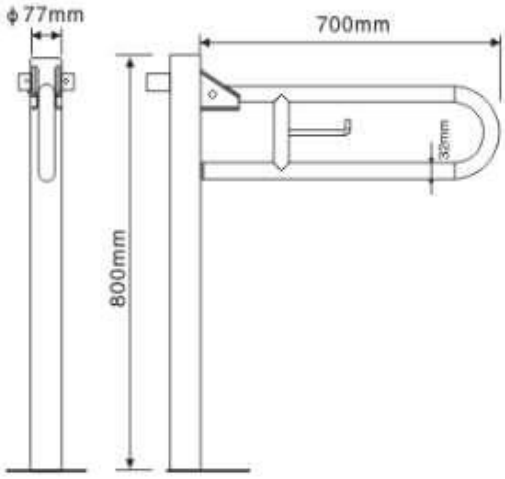

15.224.S 800x700mm

Tel: +86 571 888 685 70 Fax: +86 571 888 685 71
hotec@cnhotec.com www.cnhotec.com