GRAB BARS

Wall to wall grab bar



15.251.S, 15.252.S
stain finish



15.253.S, 15.254.S
stain finish

·Wall to wall grab bar with snap flange cover, with three support points.
·Made of a diameter of 32 mm AISI 304 stainless steel tube.
·Suitable to for washbasins and toilets.
·Highest durability and rusting resistance.
·Supplied with plugs and screws to fix the bar to a brick wall.

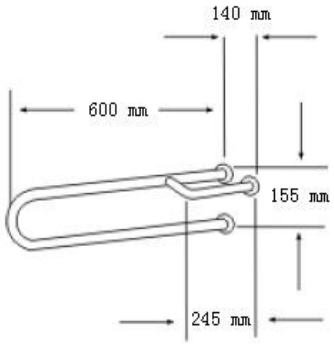

COMPONENTS & MATERIALS

·Ø32 mm tube grab. Steel thickness: 1,2 mm.
·Stainless steel screws and volts for masonry walls.
·Incorporates 6 screws holes for wall mounting.
·**15.251.S, 15.252.S left hand.**
·**15.253.S, 15.254.S right hand.**

15.251.S 600 mm
15.252.S 800 mm

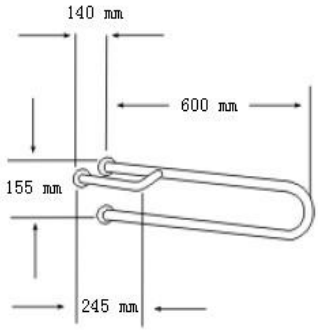

15.253.S 600 mm
15.254.S 800 mm

TECHNICAL SPECIFICATIONS

Dimension	see version table
Bar tube	Ø32 mm
Bar tube thickness	1.2 mm

Tel: +86 571 888 685 70 Fax: +86 571 888 685 71
hotec@cnhotec.com www.cnhotec.com