

EARPHONE

EARPHONE SELECTION	034
LISTEN ONLY EARPIECES	040
PTT SELECTION	042
MICROPHONE SELECTION	046
1-WIRE EARPIECES	048
1-WIRE SURVEILLANCE EARPIECES	059
2-WIRE SURVEILLANCE EARPIECES	067
3 WIRE EARPIECES	068
VOX EARPIECES	070
BRAIDED FIBER SERIES	071
LOK SERIES	072
FREE LOK	073
BLUETOOTH ACCESSORIES SOLUTION	074

RayTalk

Headsets for Professionals

EARPHONE &PTT SELECTION

- Various earphone options. Pick earphone and PTT on your preference and combine them into complete earpiece.
- Earphone can connect with 2.5mm or 3.5mm jack to become listen only earpiece.

LISTEN ONLY EARPIECE PLUG OPTIONS

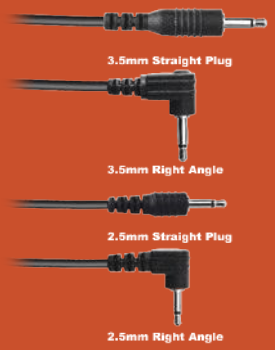

E-10

Ear bud earpiece with sponge cover.



- Receive only earpiece.
- Fit for left or right ear.
- 2.5mm or 3.5mm jack available.
- Cable length can be customized; curly or straight cable for option.



E-19

Ear bud earpiece with rubber cover.



- Receive only earpiece.
- Fit for left or right ear.
- 2.5mm or 3.5mm jack available.
- Cable length can be customized; curly or straight cable for option.



E-20

G shape adjustable ear hook earpiece.





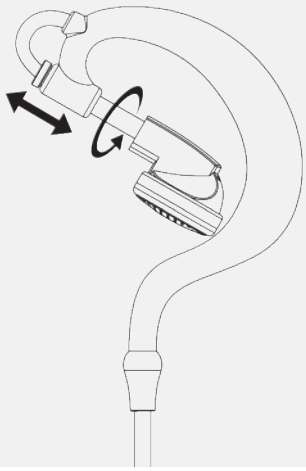

- Receive only earpiece.
- Earloop(Earhook) with earbud.
- Swivel for left or right ear.
- 2.5mm or 3.5mm jack available.
- Cable length can be customized; curly or straight cable for option.

E-28

Large adjustable ear hook earpiece.





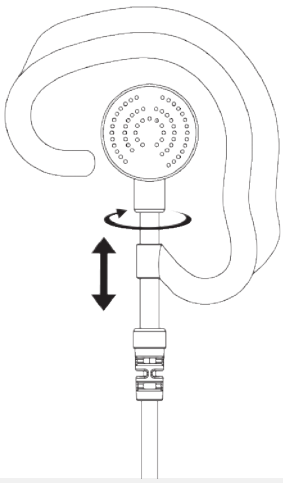

- Receive only earpiece.
- Earloop(Earhook) with earbud.
- Swivel for left or right ear.
- 2.5mm or 3.5mm jack available.
- Cable length can be customized; curly or straight cable for option.

E-30

Ear hook earpiece with changeable eartips.





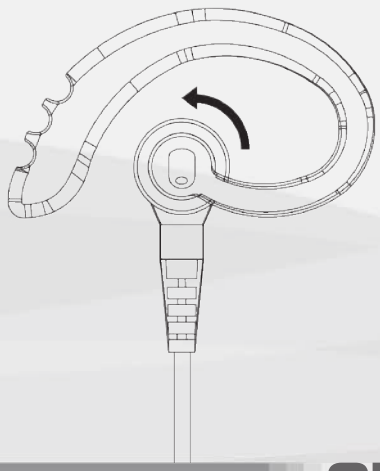

- Receive only earpiece.
- Earloop(Earhook) with eartip.
- Swivel for left or right ear.
- 2.5mm or 3.5mm jack available.
- Cable length can be customized; curly or straight cable for option.

E-32

D shape ear hook earpiece.





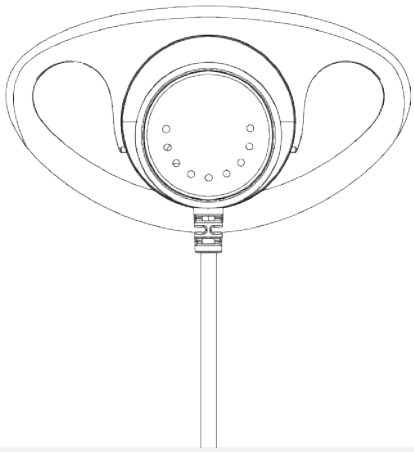

- Receive only earpiece.
- D-ring earpiece with rotational earhook.
- Swivel for left or right ear.
- 2.5mm or 3.5mm jack available.
- Cable length can be customized; curly or straight cable for option.

E-33

C-ring swivel earpiece, for left or right ear.





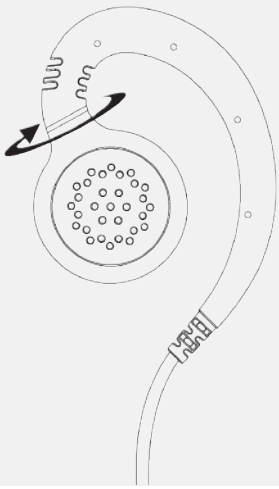

- Receive only earpiece.
- C-ring earpiece with rotational earhook.
- Swivel style earpiece,rotate for either ear.
- 2.5mm or 3.5mm jack available.
- Cable length can be customized; curly or straight cable for option.

E-37

Large G hook earpiece, for left or right ear





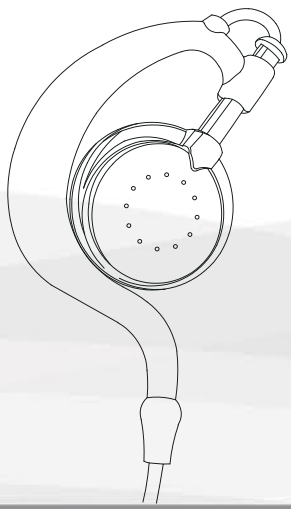

- Receive only earpiece.
- Earloop(Earhook) with earbud.
- Swivel for left or right ear.
- 2.5mm or 3.5mm jack available.
- Cable length can be customized; curly or straight cable for option.

E-39

Clear tube earpiece with plastic clip.





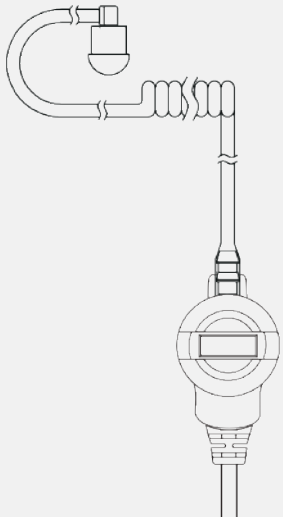

- Receive only earpiece.
- Clear tube and eartip for earpiece.
- 2.5mm or 3.5mm jack available.
- Cable length can be customized; curly or straight cable for option.

E-40

Clear tube earpiece with metal clip, beige color available(E-40B).





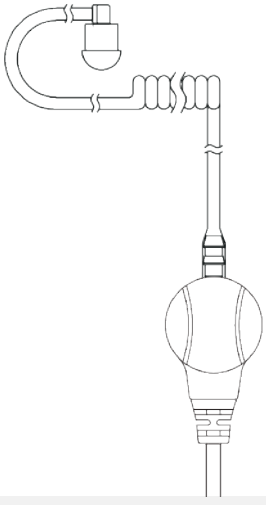

- Receive only earpiece.
- Clear tube and eartip for earpiece.
- 2.5mm or 3.5mm jack available.
- Cable length can be customized; curly or straight cable for option.

E-41

Acoustic tube earpiece with metal clip.





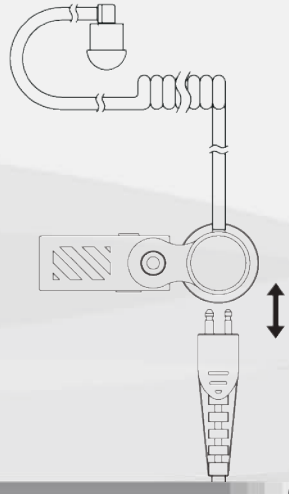

- Receive only earpiece.
- Clear tube and eartip for earpiece.
- 2.5mm or 3.5mm jack available.
- Cable length can be customized; curly or straight cable for option.
- Easy connect acoustic tube assembly for hygiene and multiple users.
- Quick disconnect single wire acoustic tube for left or right ear.

E-42

Acoustic tube earpiece with metal clip.





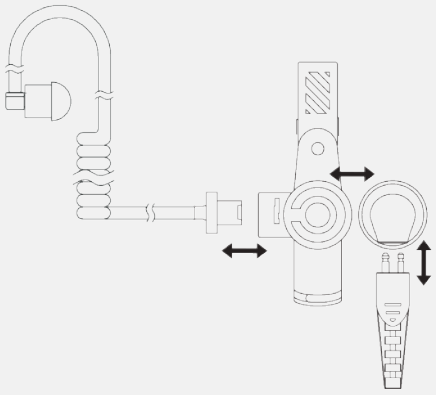

- Receive only earpiece.
- Clear tube and eartip for earpiece.
- 2.5mm or 3.5mm jack available.
- Cable length can be customized; curly or straight cable for option.
- Easy connect acoustic tube assembly for hygiene and multiple users.
- Quick disconnect single wire acoustic tube for left or right ear.

E-43

Acoustic tube earpiece with metal clip.





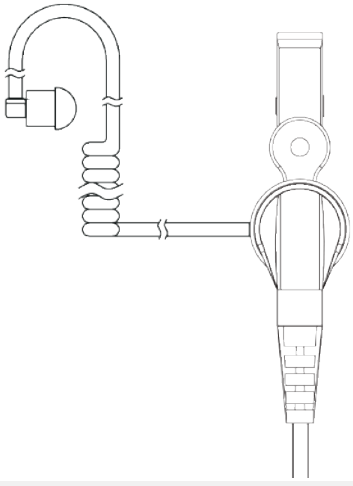

- Receive only earpiece.
- Clear tube and eartip for earpiece.
- Swivel for left or right ear.
- 2.5mm or 3.5mm jack available.
- Cable length can be customized; curly or straight cable for option.

E-44

Acoustic tube earpiece with Mini-armature Speaker for super loud and clear voice quality.





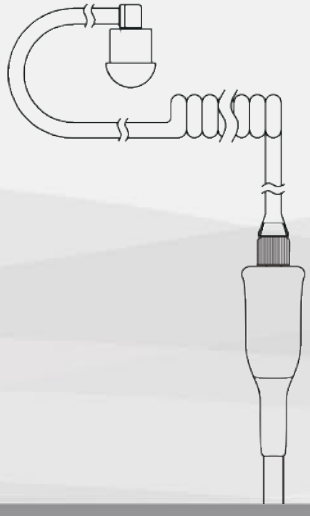

- Receive only earpiece.
- Mini-armature speaker for super loud and clear voice quality.
- Clear tube and eartip for earpiece.
- 2.5mm or 3.5mm jack available.
- Cable length can be customized; curly or straight cable for option.

E-45

Acoustic tube earpiece with Mini-armature Speaker for super loud and clear voice quality.



- Receive only earpiece.
- Mini-armature speaker for super loud and clear voice quality.
- Clear tube and eartip for earpiece.
- 2.5mm or 3.5mm jack available.
- Cable length can be customized; curly or straight cable for option.



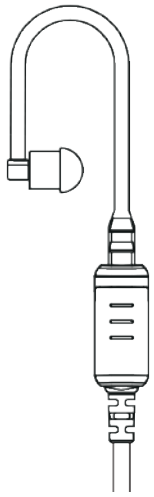

E-46

Resilient earbud with mini-armature speaker for super loud and clear voice quality.







Listen Only Earpiece(Drawing for reference)

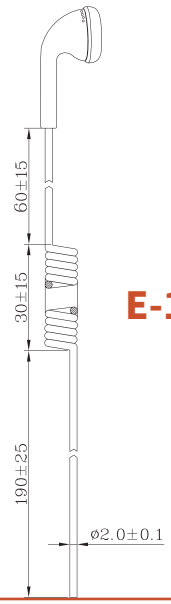

E-10/CC

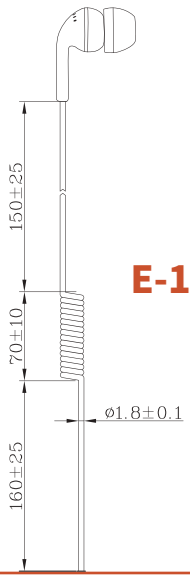

E-19/CC



E-20/CC

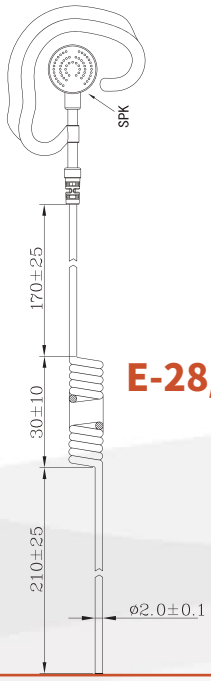

E-28/CC

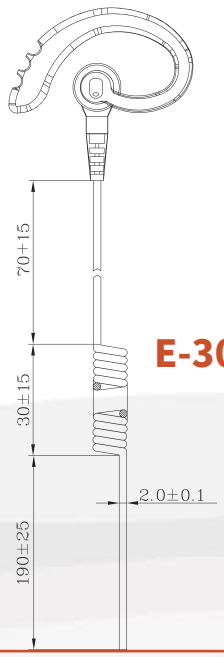

E-30/CC

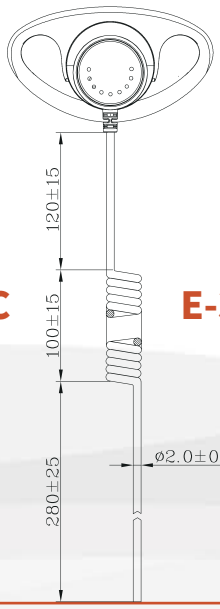

E-32/CC

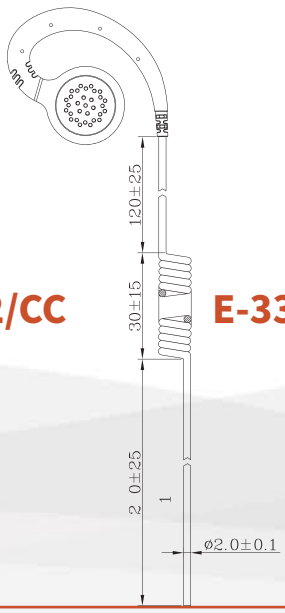

E-33/CC

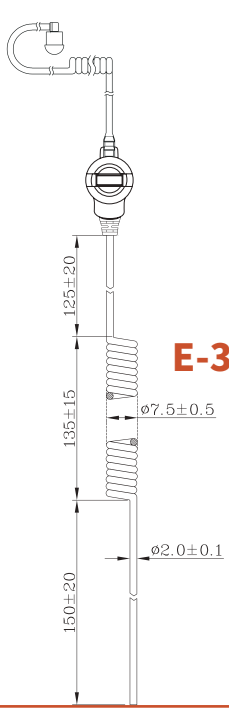

E-39/CC

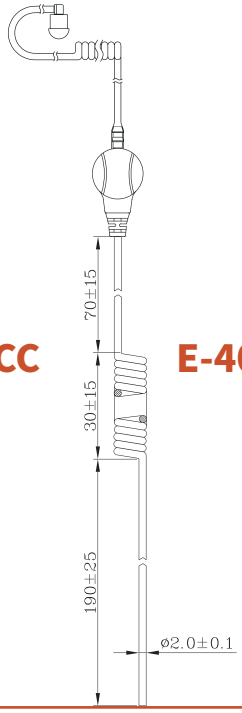

E-40/CC

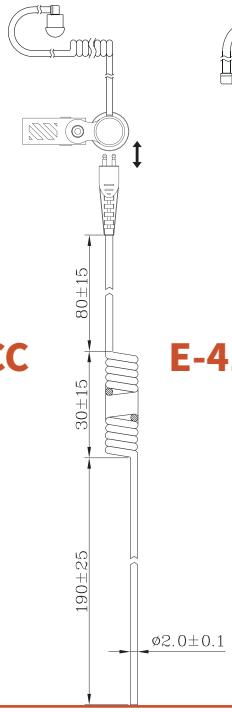

E-41/CC

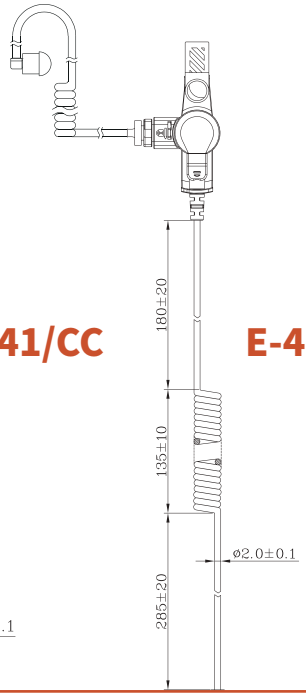

E-42/CC

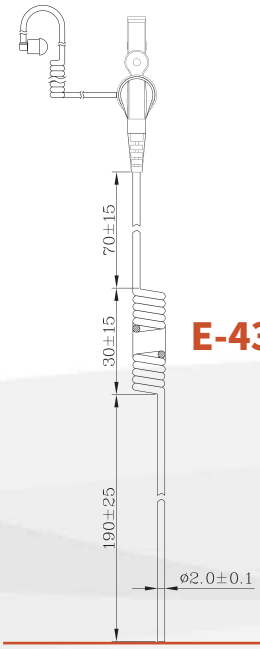

E-43/CC

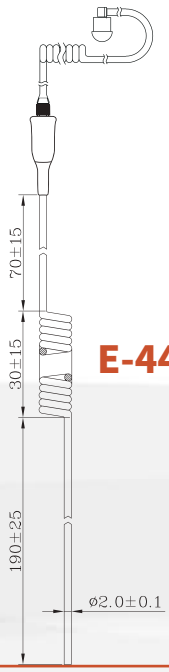

E-44/CC

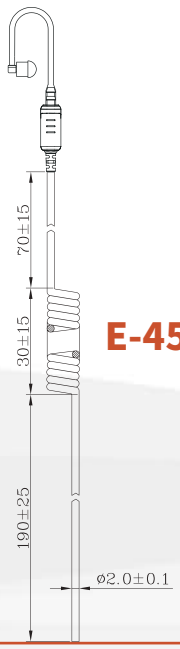

E-45/CC

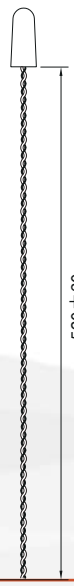

E-46/SC

PTT #13A

Large in-line PTT with microphone & metal clip.

45*22*14.5(MM)



PTT #13/13Q

Palm lapel PTT with microphone & metal clip, with 3.5mm quick disconnect audio jack(13Q).

45*22*14.5(MM)





PTT #19

Palm lapel PTT with microphone & metal clip.

49.8*14.5*20.9(MM)



PTT#19A

Large in-line PTT with metal clip.

49.8*14.5*20.9(MM)

PTT #22

Small lapel PTT with microphone & metal clip,VOX optional.

32.7*12.7*19.8(MM)



PTT #23

Lapel PTT with microphone, with VOX switch.

35.5*14.1*23.25(MM)





PTT #27

Palm lapel PTT with microphone & metal clip.

32.5*12*17.6(MM)



PTT#27A

In-line PTT with microphone & metal clip.

32.5*12*17.6(MM)

PTT #28

In-line PTT with microphone, VOX optional.

34.6*14*15.7(MM)



PTT #29A

Large in-line PTT and external 2.5mm jack for remote finger PTT Mic optional.

49.8*14.5*20.9(MM)





PTT #30

Big lapel PTT and external 2.5mm jack for remote finger PTT Mic optional.

47.6*14.6*25.7(MM)



PTT #32

Palm lapel PTT with microphone & metal clip.

61.5*15.7*26.8(MM)

PTT #36

Large in-line PTT with metal clip.

68*14*23.9(MM)



PTT #38/38B

Large PTT with microphone & metal clip, Beige color available (PT#38B).

51.1*15.3*18.6(MM)





PTT #39

Large PTT with microphone & metal clip.

53.5*15.1*17.3(MM)



PTT #40/41

Barrel type PTT, beige color available(PT#41).

50*14.8(MM)



PTT #42

Small lapel PTT with microphone & metal clip, VOX optional.

28.6*10.1*18.2(MM)



PTT #43

Waterproof finger PTT with Velcro.

19.4*8.27*19(MM)

PTT #44A

Waterproof & Dustproof finger PTT with velcro.

65*31.5*17.5(MM)



PTT #45

Medium finger PTT with velcro.

33.9*15.5*20.7(MM)





PTT #46

Large finger PTT with velcro.

36.8*24*23.1(MM)



PTT #47

Palm lapel PTT with microphone & metal clip.

19.4*8.27*19(MM)

PTT #47A

In-line PTT with microphone & metal clip.

33.9*15.5*20.7(MM)



PTT #48

Finger PTT with velcro.

30*20*15(MM)





PTT #50

Big round PTT with belt clip.

51.1*27.1*51.1(MM)



PTT #51

Fireproof, waterproof and dustproof Big round PTT with belt clip.

73*40*73(MM)

PTT #53

Waterproof Big round PTT with belt clip.

64*55.9*25.7(MM)



PTT #53Q/53P

Waterproof Big round PTT with belt clip, With quick disconnect Hirose jack(53Q), With a 2.5mm external jack for finger PTT(53P).

64*55.9*25.7(MM)





PTT #58

Dual PTT buttons with microphone

46*19.5*13(MM)

PTT #61U/61D

Fireproof, waterproof and dustproof Big round PTT with belt clip, 7.1mm Nexus female jack up(61U) and down(61D)

73*40*73(MM)



MIC-01

Lapel microphone with plastic clip



MIC-02

Lapel microphone with metal casing and clip



MIC-03

Large in-line microphone with metal clip



MIC-04

Lapel microphone with metal casing and clip



MIC-05

Lapel microphone with metal clip



MIC-06

Lapel mic. with pin clip, metal wire clip optional



Select your favorite earphone.



Choose a PTT



Tell us which radio you use.

1-WIRE

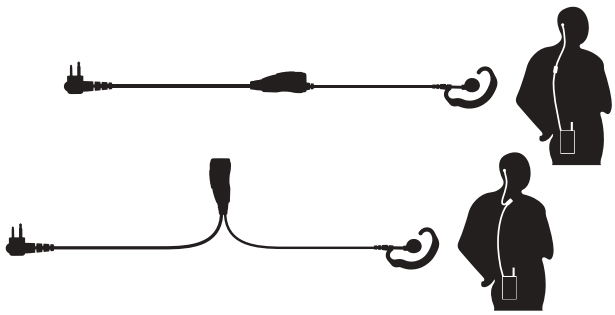

2-WIRE

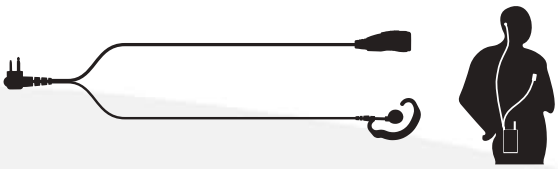

3-WIRE



PTT/MIC PTT# 13Q

PTT/MIC with 3.5mm Jack for assorted earphone accessories

Various earphone options



E-10

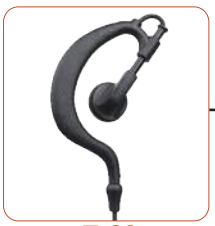

E-20



E-32



E-42



FEATURES

- Detachable Style.
- Built in microphone.
- 360 degree metal revolving back clip can be turned by different segments to secure to the user's lapel or collar.
- Reinforced strain relief gives unit maximum durability.
- 3.5 mm external jack for optional earphone.
- Many connector types are available for various brands two way radios communication.

PTT/MIC PTT# 34

A straight through in-line PTT with microphone



Optional earphones:

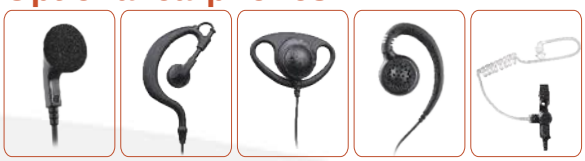

FEATURES

- High performance noise canceling microphone can hear clear voice in a noisy environment.
- Easy and convenient button with attached PTT
- 3.5mm external jack for optional earphone
- 4.0mm cable and reinforced strain relief gives unit maximum durability
- Optional earphones in either mono or stereo.

PTT/MIC PTT# 52

A straight through in-line PTT with microphone





Optional earphones:



FEATURES

- A straight through in-line PTT with microphone.
- Wrap up the extra line for a perfect fit.
- Make it long or make it short.
- 360 Degree Rotatable clothing clip.
- Industry leading 30lb pull strength at both ends of PTT.

1-WIRE EM-1928-M1/SC Ear Bud



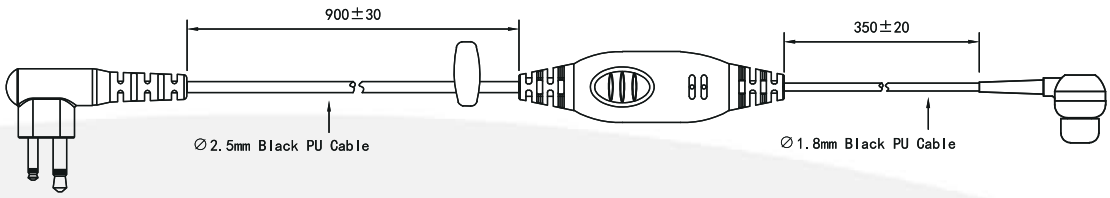

FEATURES

- Ear bud earpiece with inline microphone and PTT button, cable with clothing clip.
- Superior performance earphone.
- Design for General, Hospitality, Hotels and Entertainment Markets.
- Left or right ear.
- Mention about the VOX function if needed.

1- WIRE EARPIECES

1-WIRE EM-2027A-M1/SC G Hook







Metal Reinforced
Swivel Clip



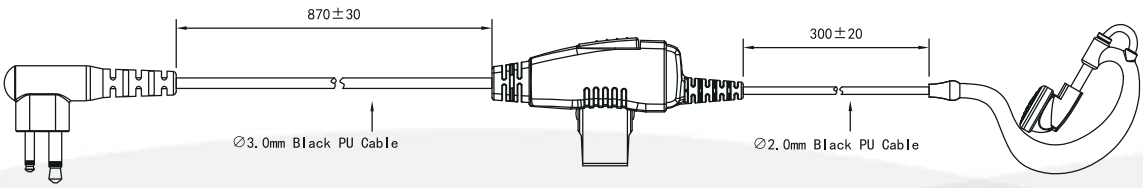

FEATURES

- Soft rubber ear hook, flexible and secure.
- Left or right ear.
- In-line microphone with PTT button, with metal clip.
- Sensitive to whisper.
- Kevlar cables for extended life in the field.
- Great for Security, Hotels, Casinos, Rentals, etc.

1- WIRE EARPIECES

1-WIRE EM-2847A-M1/SC Ear Hook







Metal Reinforced
Swivel Clip



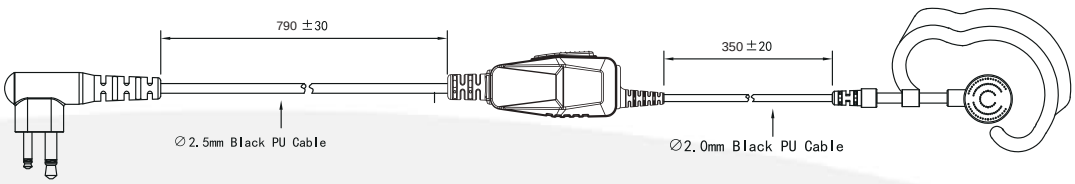

FEATURES

- Low profile,rugged lapel mic.
- Soft earhook earpiece with large inline PTT/Microphone.
- Adjustable for left or right ear usage.
- Molded strain relief help to protect cables from excessive bending and pulling.
- Great for General, Hospitality, Hotels, Casinos, Rentals and Entertainment Markets.

1- WIRE EARPIECES

1-WIRE EM-3327A-M1/SC C Shape







Metal Reinforced
Swivel Clip



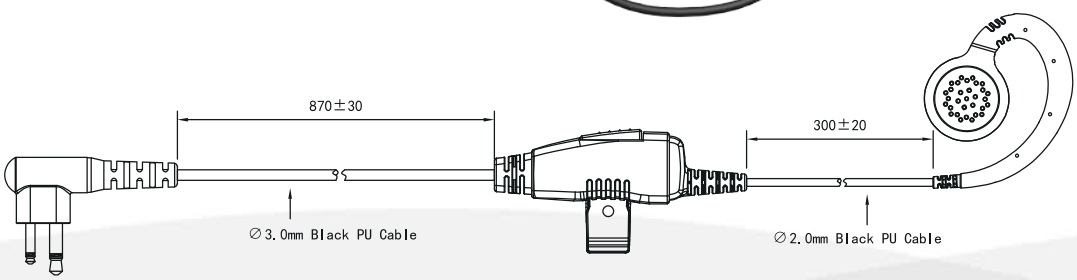

FEATURES

- Soft Rubber C-Ring adjustable earloop with clear audio speaker.
- Lightweight and balanced to provide comfortable all day wearing.
- Polyurethane-jacketed, Kevlar cables for extended life in the field.
- Great for Security, Hotels, Casinos, Rentals, etc.

1- WIRE EARPIECES

1-WIRE EM-2027-M1/SC/1W G Shape







Metal Reinforced
Swivel Clip



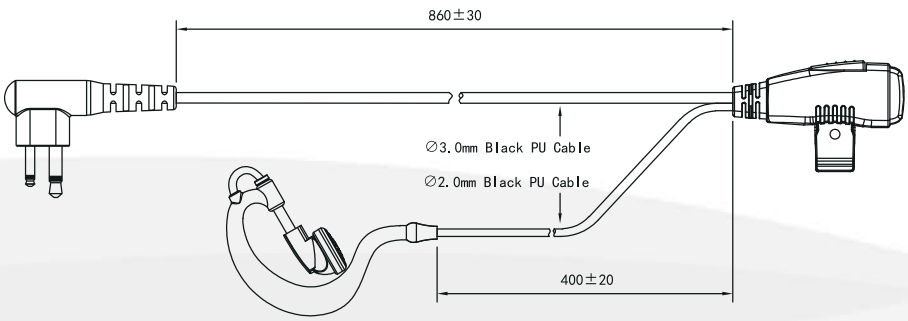

FEATURES

- Soft earhook earpiece with small lapel PTT/Microphone.
- Adjustable for left or right ear usage.
- Molded strain relief help to protect cables from excessive bending and pulling.
- High quality electret condenser mic element produce excellent transmit audio.
- Great for General, Hospitality, Hotels, Casinos, Rentals and Entertainment Markets.

1- WIRE EARPIECES

1-WIRE EM-3022-M1/SC/1W G Shape







Metal Reinforced Swivel Clip



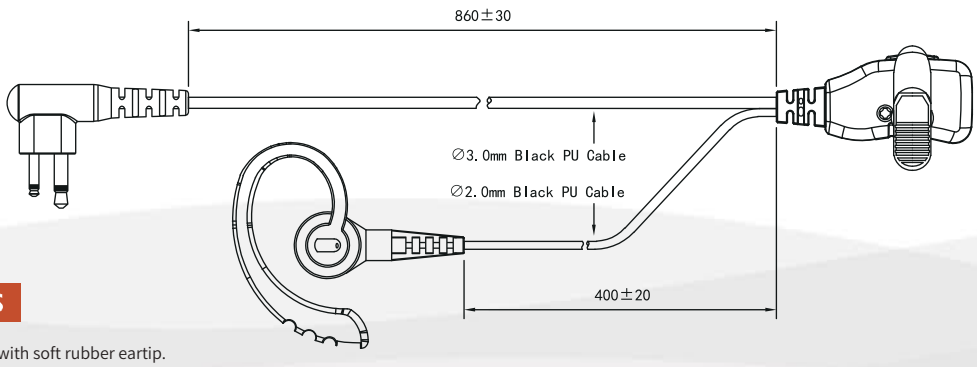

FEATURES

- G shape ear hook with soft rubber eartip.
- Soft earhook earpiece with small lapel PTT/Microphone.
- Adjustable for left or right ear usage.
- Molded strain relief help to protect cables from excessive bending and pulling.
- High quality electret condenser mic element produce excellent transmit audio.
- Great for General, Hospitality, Hotels, Casinos, Rentals and Entertainment Markets, etc.

1- WIRE EARPIECES

1-WIRE EM-3239-M1/SC/1W D Shape







Metal Reinforced Swivel Clip



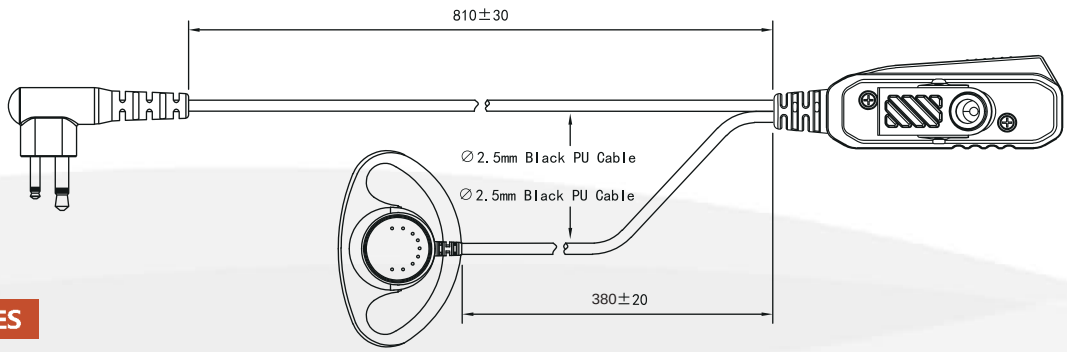

FEATURES

- Rugged lapel mic with surveillance style D-ring earphone.
- The D shape is a secure comfortable style earpiece that provides outstanding receive audio.
- Rugged,polycarbonate housing allows for maximum durability.
- Molded strain reliefs help to protect cables from excessive bending and pulling.
- Conveniently located PTT button for easy use.
- Great for General, Hospitality, Hotels, Casinos, Rentals and Entertainment Markets.

1- WIRE EARPIECES

1-WIRE EM-3327-M1/SC/1W C Shape







Metal Reinforced Swivel Clip



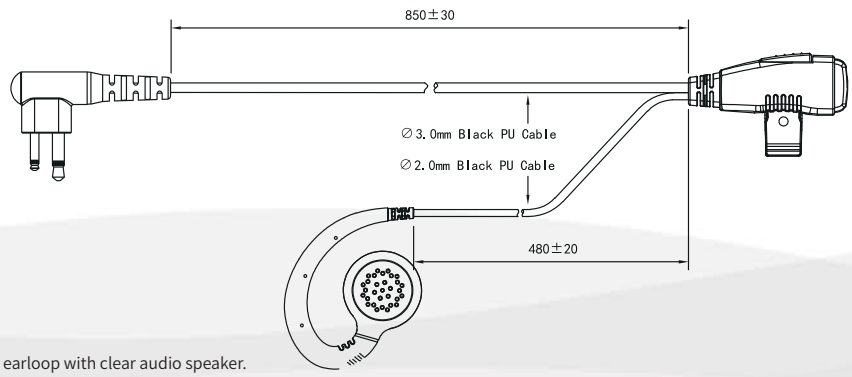

FEATURES

- Soft Rubber C-ring adjustable earloop with clear audio speaker.
- Lightweight and balanced to provide comfortable all day wearing.
- Polyurethane-jacketed, Kevlar cables for extended life in the field.
- Great for Security, Hotels, Casinos, Rentals, etc.

1-WIRE SURVEILLANCE EARPIECES

1-WIRE EM-3927-M1/SC/1W

Surveillance Acoustic Tube

Ear tips

More ear buds to see page 118









Metal Reinforced Swivel Clip

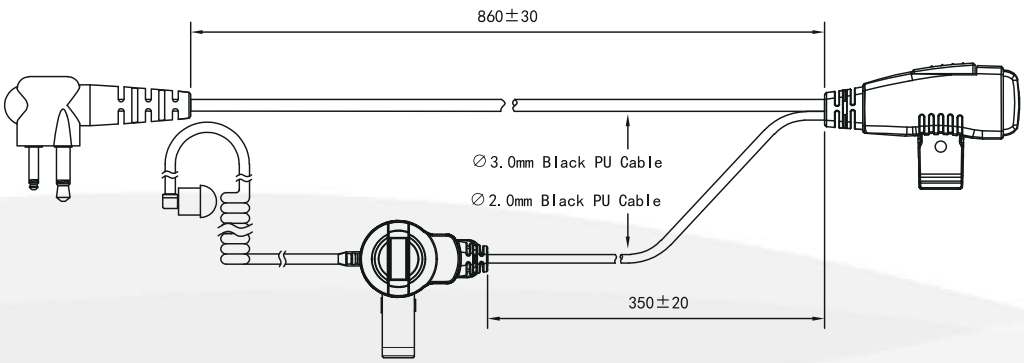

FEATURES

- Medium duty 1-wire surveillance kit with acoustic tube earphone.
- Low profile ear tube and provide outstanding receive audio.
- Discreet communications, comfortable to wear for long hours.
- Can be easily concealed under a sport coat, jacket or other clothing.
- Design for Surveillance, Security, Public Safety, etc.

1-WIRE SURVEILLANCE EARPIECES

1-WIRE EM-4047-M1/SC/1W

Surveillance Acoustic Tube

Ear tips
More ear buds to see page 118









Metal Reinforced Swivel Clip

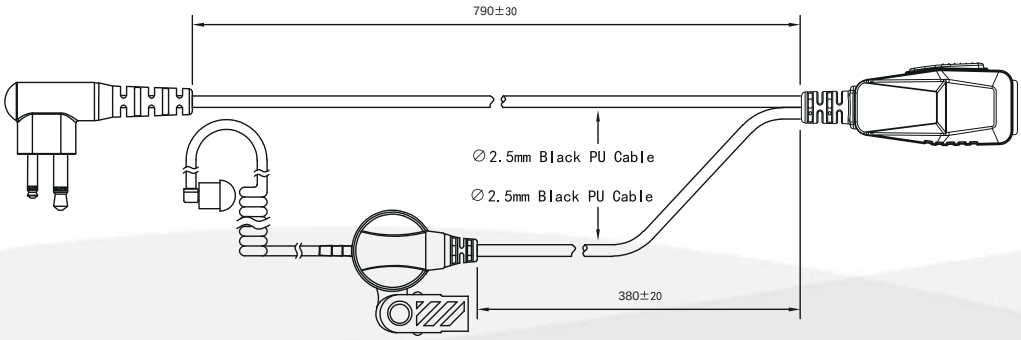

FEATURES

- Medium duty 1-wire surveillance kit with acoustic tube earphone.
- Low profile ear tube and provide outstanding receive audio.
- Discreet communications, comfortable to wear for long hours.
- Can be easily concealed under a sport coat, jacket or other clothing.
- Design for Surveillance, Security, Public Safety, etc.

1-WIRE SURVEILLANCE EARPIECES

1-WIRE EM-4132-M1/SC/1W

Surveillance Acoustic Tube

Ear tips
More ear buds to see page 118









Metal Reinforced Swivel Clip

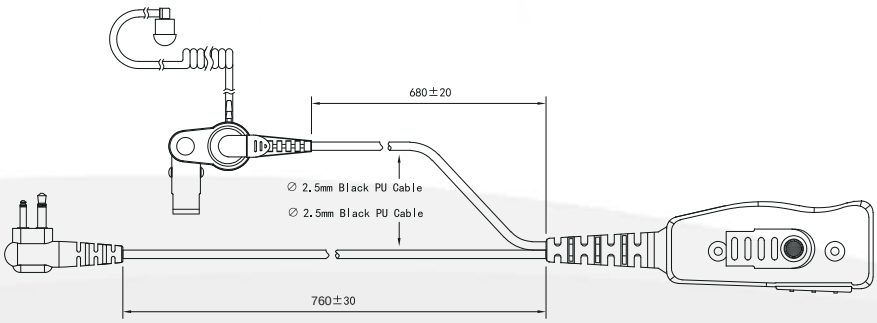

FEATURES

- Soft-touch small lapel Push-to-talk (PTT), Built in microphone.
- Earphone with Acoustic Tube,easy connect acoustic tube assembly for hygiene and multiple users.
- Can be worn on the lapel or shirt cuff.
- Molded strain relief help protect cables from excessive bending and pulling.
- Straight cables are very flexible.
- Discreet communications, comfortable to wear for long hours.

1-WIRE SURVEILLANCE EARPIECES

1-WIRE EM-4238-M1/SC/1W

Surveillance Acoustic Tube

Ear tips
More ear buds to see page 118









Metal Reinforced Swivel Clip

Connector Chart See Page 112

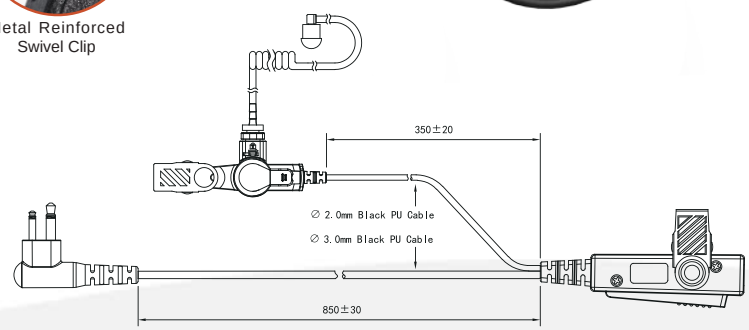

FEATURES

- Rugged lapel mic with surveillance style acoustic tube earphone.
- Quick connect acoustic tube assembly for hygiene and multiple users.
- Reinforced earphone clip provides cables retention and eliminates strain on earphone.
- Molded strain reliefs help protect cables from excessive bending and pulling.
- Polyurethane cable, coiled or straight optional.
- Discreet communications, comfortable to wear for long hours.

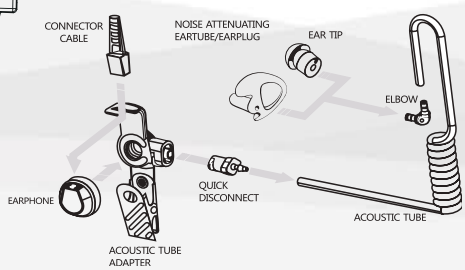

1-WIRE SURVEILLANCE EARPIECES

1-WIRE EM-4342-M1/SC/1W

Surveillance Acoustic Tube

Ear tips
More ear buds to see page 118









Metal Reinforced Swivel Clip



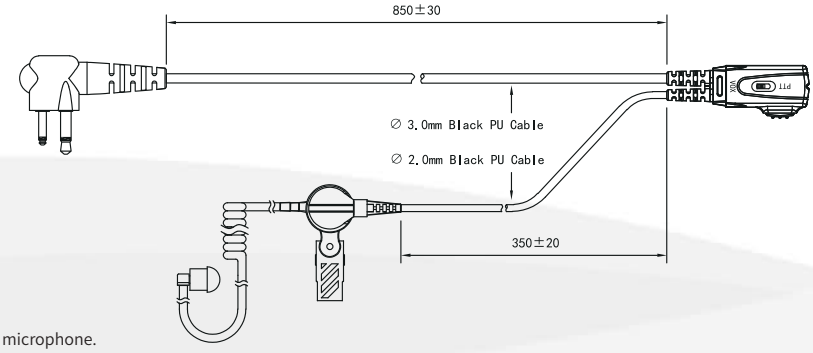

FEATURES

- Soft-touch small lapel Push-to-talk (PTT), Built in microphone.
- Earphone with Acoustic Tube with metal clip, VOX switch optional.
- Can be worn on the lapel or shirt cuff.
- Molded strain reliefs help protect cables from excessive bending and pulling.
- Straight cables are very flexible.
- Discreet communications, comfortable to wear for long-time wearing.

1-WIRE SURVEILLANCE EARPIECES

1-WIRE EM-4438-M1/SC/1W

Surveillance Acoustic Tube



Ear tips

More ear buds to see page 118

Connector Chart See Page 112

Threaded Tube Release



Balanced Armature Speakers

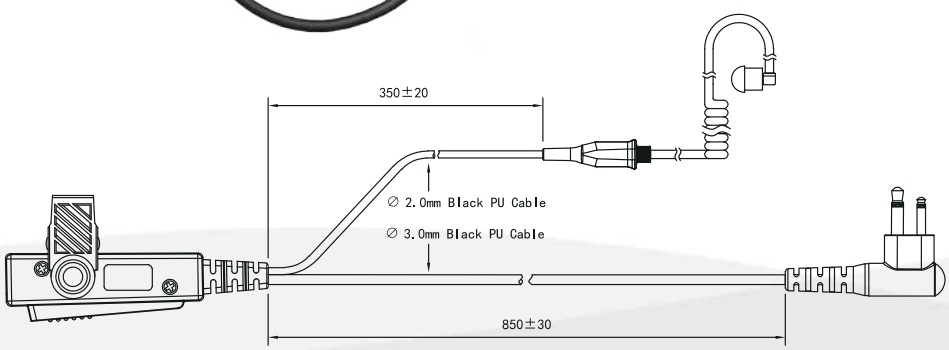

FEATURES

- Medium duty 1 wire surveillance kit with acoustic tube earphone.
- Low profile ear tube and provide outstanding receive audio.
- Discreet communications, comfortable to wear for long hours.
- Can be easily concealed under a sport coat, jacket or other clothing.
- Design for Surveillance, Security, Public Safety, etc.

1-WIRE SURVEILLANCE EARPIECES

1-WIRE EM-440250-M1/SC/1W

Surveillance Acoustic Tube

Ear tips
More ear buds to see page 118





EM-4402

FEATURES

- Durable cable with 4.0mm & 2.6mm diameter.
- High quality speaker output for clear audio.
- Lapel microphone with metal casing & alligator clip.
- Large PTT with spring-loaded belt clip.
- Silastic airtube with standard earbud insert.
- Mostly for duplex radios.

1-WIRE SURVEILLANCE EARPIECES

1-WIRE EM-450453-M1/SC

Surveillance Acoustic Tube

Ear tips
More ear buds to see page 118





Quick-Disconnect(QD) for Easy Replacement and Cleaning



Mushroom Eartip

Balanced Armature Speaker





Lapel Mic with Metal Casing





Big Round PTT

Molded Connector with Strain Relief



Connector Chart See Page 112



Metal Reinforced Swivel Clip

Cable splitter

FEATURES

- Durable cable with 4.0mm & 2.6mm diameter.
- High quality speaker output for clear audio.
- Lapel microphone with metal casing & alligator clip.
- Large PTT with spring-loaded belt clip.
- Silastic airtube with standard earbud insert.
- Mostly for duplex radios.

2-WIRE SURVEILLANCE EARPIECES

2-WIRE EM-4238-M1/SC/2W

Surveillance Acoustic Tube

Ear tips
More ear buds to see page 118









Metal Reinforced Swivel Clip



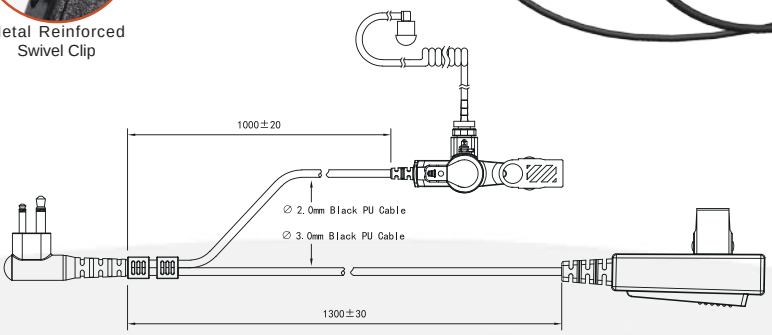

FEATURES

- Rugged lapel mic with surveillance style acoustic tube earphone.
- Quick connect acoustic tube assembly for hygiene and multiple users.
- Reinforced earphone clip provides cables retention and eliminates strain on earphone.
- Molded strain reliefs help protect cables from excessive bending and pulling.
- Polyurethane cable,coiled or straight optional.
- Discreet communications,comfortable to wear for long hours.

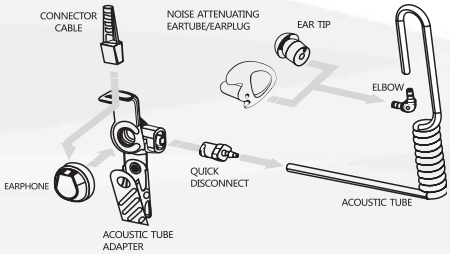

3-WIRE EARPIECES

3-WIRE EM-320140-M1/SC/3W

Three Wire D Shape Earpiece





EM-200140



EM-400140

FEATURES

- Kevlar reinforced cable.
- Adjustable / removable clothing pin and clip.
- Silent barrel Push-to-talk(PTT) with clip.
- D-ring swivel earpiece, either left or right ear.
- Designed for high level of discreet communications.

3-WIRE EARPIECES

3-WIRE EM-X0140-M1/SC/3W

Three Wire Earpiece w/ 3.5mm Female Jack

Various earphone options



E-10



E-20



E-32



E-42

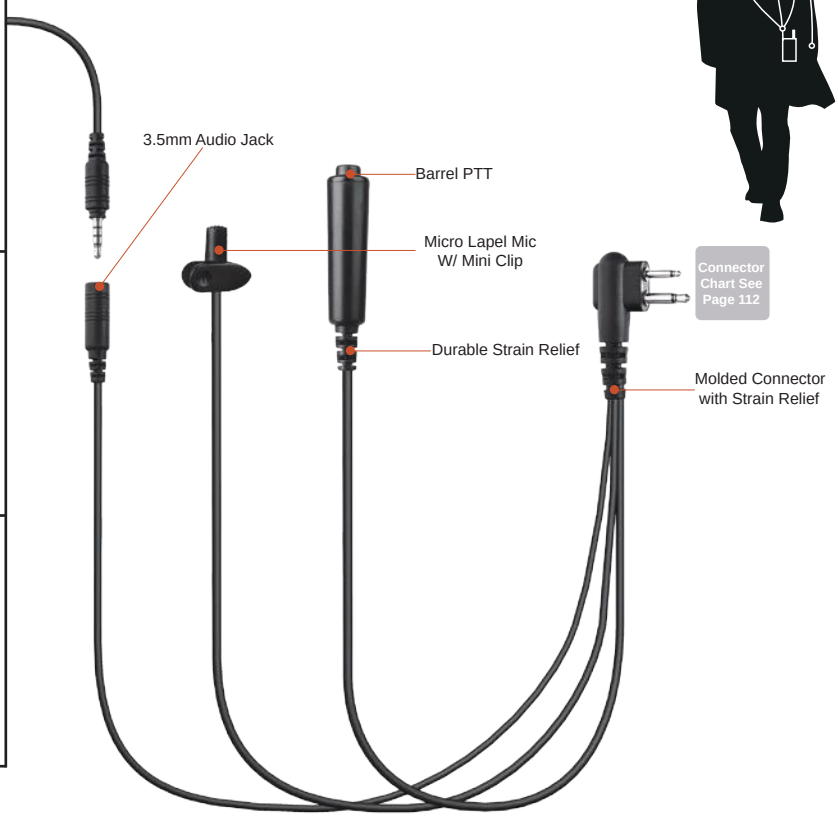

FEATURES

- Separated microphone, PTT button and earpiece for discreet communication.
- Micro lapel mic can transmit under clothing.
- Barrel PTT form fits for easy transmission.
- Strong but flexible cable with Kevlar reinforcement.
- Quick disconnect 3.5mm connetcor,available for different ear pieces.

1-WIRE VOX EARPIECES

VOX function pending radio support

1-WIRE **EM-1928-M1/VOX/SC** **Ear Bud**





1-WIRE **EM-2023-M1/VOX/SC/1W** **G Shape**





1-WIRE **EM-3242-M1/VOX/SC/1W** **D Shape**





FEATURES

- Small and comfortable ensure a discreet communication for users.
- Choose from earbud or over the ear design.
- With in-line microphone /PTT / VOX switch.



BRAIDED FIBER SERIES

3 x Stronger Than Traditional Resin Line

- Improve cable durability with less cracking and tearing.
- Braided fiber design minimizes tangling and prevents kinking.
- Protect wiring from force and friction.
- Does not get tangled.



EM-2022-M1/NC/1W



EM-3327-M1/NC/1W



EM-4238-M1/NC/1W



LOK SERIES

- RayTalk Quick disconnect feature that allows easy interchangeable options.
- Kevlar reinforced cabling on all wire kits for added durability.
- Replaceable components.

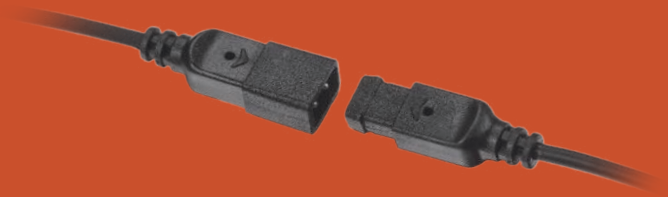

INTERCHANGEABLE EAR PIECES



E-20/LOK1/SC
Earloop



E-32/LOK1/SC
D Shape Earhook



E-33/LOK1/SC
Swivel Earpiece



E-42/LOK1/SC
Quick Disconnect
Acoustic Tube



E-43/LOK1/SC
Quick Disconnect
Clear Tube

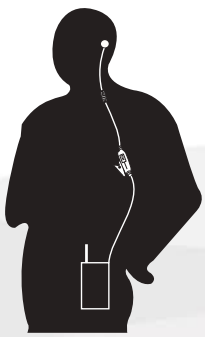



M-27A/LOK1/CC





M-27/LOK1/CC

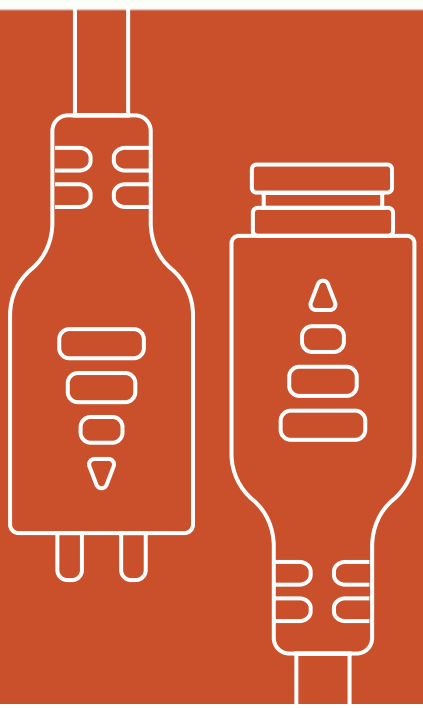

FREE LOK

- RayTalk Quick disconnect feature that allows easy interchangeable options.
- Kevlar reinforced cabling on all wire kits for added durability.
- Replaceable components.



INTERCHANGEABLE EAR PIECES



E-20/LOK2/SC
Earloop



E-32/LOK2/SC
D Shape Earhook



E-33/LOK2/SC
Swivel Earpiece



E-42/LOK2/SC
Quick Disconnect
Acoustic Tube



E-40/LOK2/SC
Quick Disconnect
Clear Tube

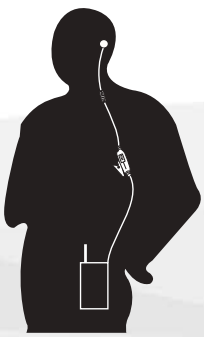



M-13A/LOK2/CC

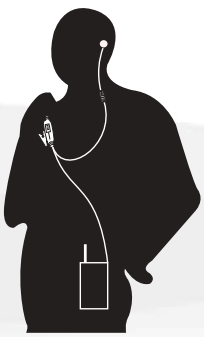



M-13/LOK2/CC

Bluetooth Accessories Solution

RayTalk explores new product line for Bluetooth accessories solution. A variety of products with different function is available, and they can help you get easy connection instead of wiring styles.

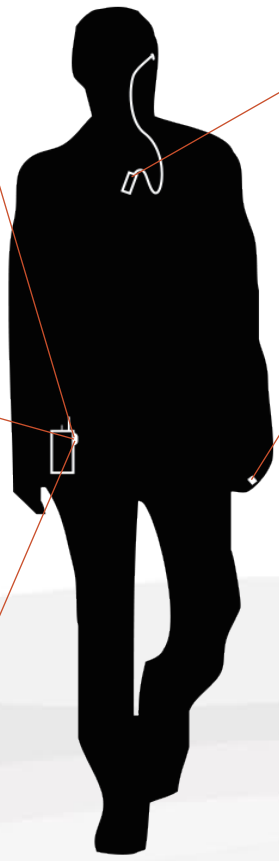

BluePTT
Bluetooth Radio

BluePTT-M9
Bluetooth
Radio Adapter

BluePTT-M11
Bluetooth
Radio Adapter

BT-01
Bluetooth Lapel
microphone

BT-PTT1
Bluetooth
Finger PTT Kit

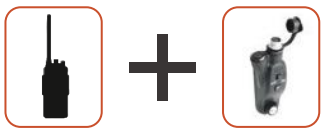

Two-Way Radio
+
BluePTT-M9/M11

Bluetooth matching

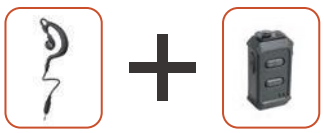

Listen Only Earpiece
+
BT-01
Multi options of interchangeable earpiece via 3.5mm jack

Bluetooth matching



BT-PTT1
Bluetooth Finger PTT Kit