Shanghai Komman Vehicle Component & System Co., Ltd

Confidential-Property of KM Auto. Do not copy or distributor by any means or for any purpose without prior written authorization of KM Auto.

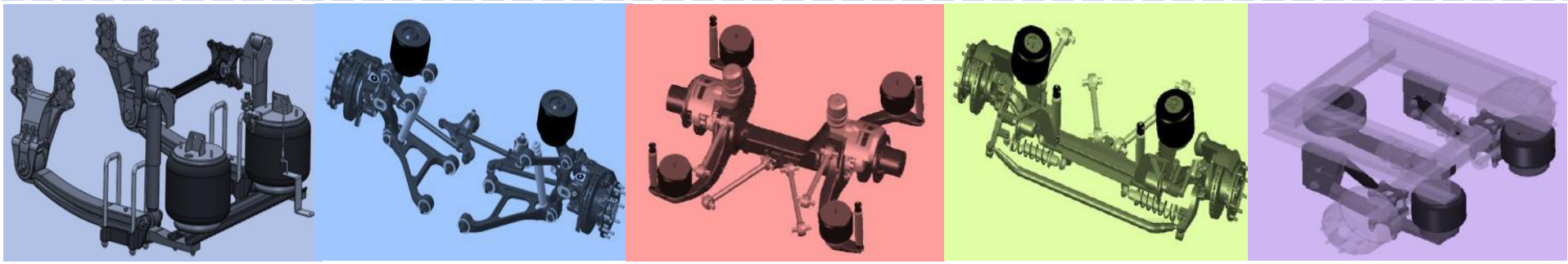

2001-Komman established

2011- Reformed as Stock limited Company

2013- Public Company in China stock market

2013-No.1 market share on bus air suspension industry

2016-income exceeded 500 million RMB No.1

2017-Income 622 million RMB. No.1

Open Cooperation

Company Profile

- Registered capital of 58.616 million RMB
- Total assets are nearly 600 million RMB
- Annual production capacity of 60,000 sets



Certifications

Shanghai high - tech enterprises

Shanghai small giant enterprises

Patent work enterprises in Shanghai

Patent work trail-center enterprises

Shanghai Technology Center

Shanghai famous brand

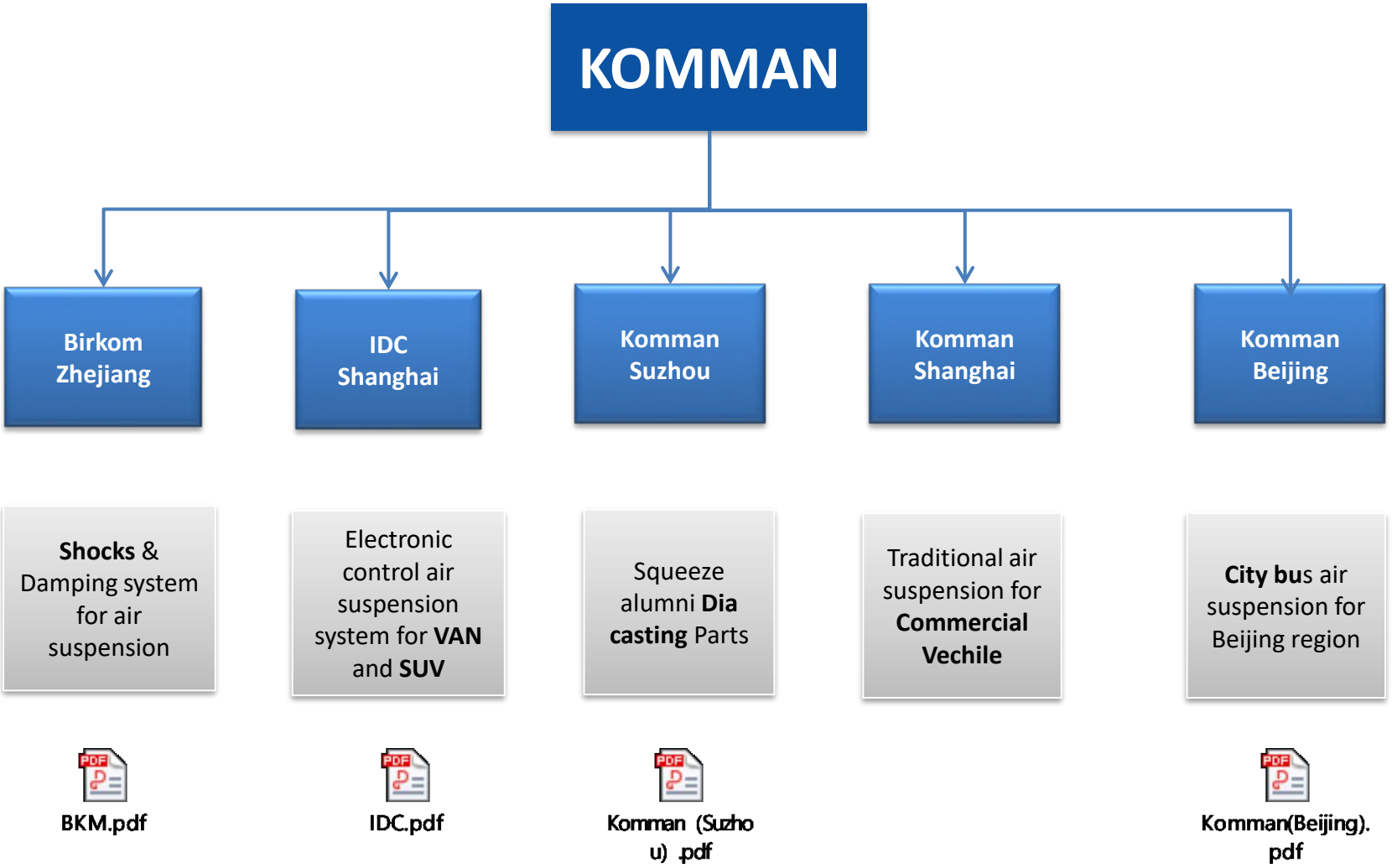
KOMMAN
Birkom Zhejiang
IDC Shanghai
Komman Suzhou
Komman Shanghai
Komman Beijing
Shocks & Damping system for air suspension
Electronic control air suspension system for VAN and SUV
Squeeze alumni Dia casting Parts
Traditional air suspension for Commercial Vechile
City bus air suspension for Beijing region
BKM.pdf
IDC.pdf
Komman (Suzhou) .pdf
Komman(Beijing).pdf



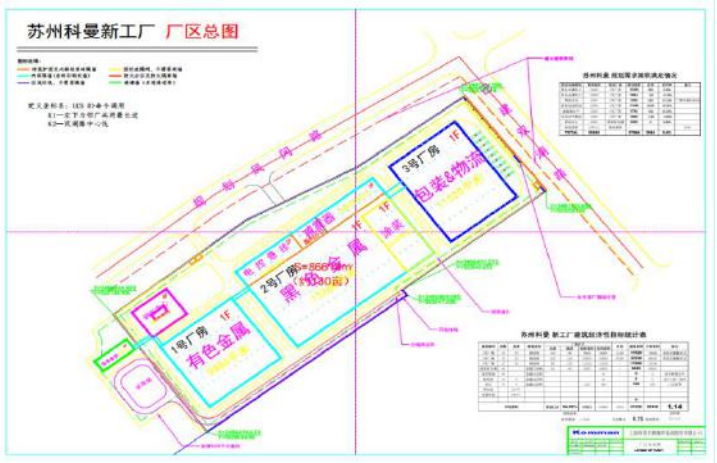

New factory investment scale and capacity

1. Investment scale：

The total investment of the project is **600 million RMB**,

2. Capacity planning：

2. 1 commercial vehicle **air suspension system**: annual output of **100,000 axles**;

2.2 **Shock absorber:** annual output of **1.5 million pcs**;

2.3 **Electronically controlled air suspension system**: annual output of **25,000 sets**;

2.4 Annual output of **Structure metal parts** is **6000T**;

2.5 **Lightweight aluminum parts:** annual output of **6 million pieces**.



No.1 market share since 2013 in Air suspension system industry



Sales

￥622 Million

Market Share

≈ 35 %



Employees: 300+

Technical Team： 40 +





Total：
5 invention patents
39 utility model patents



Famous Trademark

200
ISO9001:2000

2008
TS16949

2016
OHSAS18001:2007

2016
ISO 14001：2004





Laboratory

Building area 1450 square meters

Experimental equipment assets more than 10 million RMB

Approved by **ISO/IEC17025**

- ZSDS-200 chassis life fatigue testing machine
- DDL200 electronic universal testing machine
- SDS200 hydraulic universal fatigue testing machine
- PMW-500 hydraulic pulsation fatigue testing machine
- DSP811T four wheel aligner
- NWS2000 torsional stiffness testing machine
- YSYW-90 salt spray test machine, coordinate measuring machine
- Direct reading spectrometer, ultrasonic flaw detector
- HW2000B high frequency infrared carbon and sulfur analyzer
- Bush hardness tester, Rockwell hardness count, display Rockwell hardness tester



中国合格评定国家认可委员会

实验室认可证书

（注册号：CNAS L6545）

兹证明：

上海科曼车辆部件系统股份有限公司实验室

上海市嘉定区新甸路 1399 号，201815

符合 ISO/IEC 17025：2005《检测和校准实验室能力的通用要求》（CNAS-CL01《检测和校准实验室能力认可准则》）的要求，具备承担本证书附件所列服务能力，予以认可。

获认可的能力范围见标有相同认可注册号的证书附件，证书附件是本证书组成部分。

签发日期：2016-10-20

有效期至：2022-11-24

初次认可：2013-11-25

中国合格评定国家认可委员会授权人



Lab Spark 750B Direct Reading Spectrometer



Roomer Infinite Three coordinate system



Chassis life test bench



Shock absorber fatigue life test bench





Electro-hydraulic pulsation fatigue test

Development and application of truck single swing arm structure air suspension



Propose product concept 2008

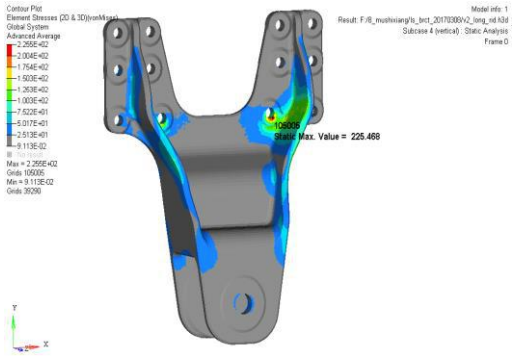

Determine product requirements and design options 2009

◆Design verification: performance calculation, CAE analysis

◆ Bench test verification: parts/system

◆ Road test verification: vehicle



Product verification 2009-2010

Development and application of truck air suspension—Off-road vehicle platform Bench test



Lateral force condition

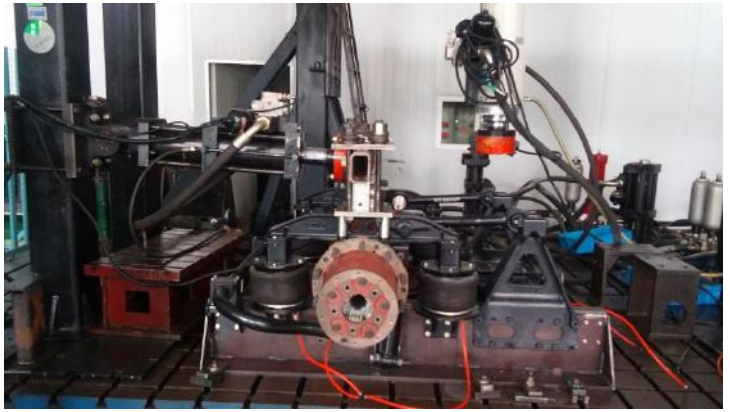

Longitudinal force condition

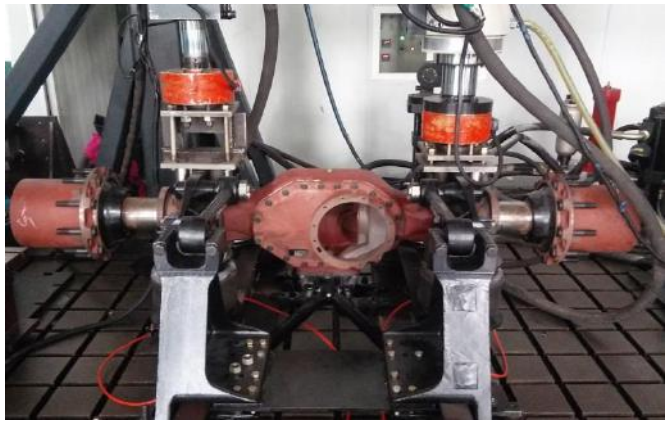

Vertical force condition

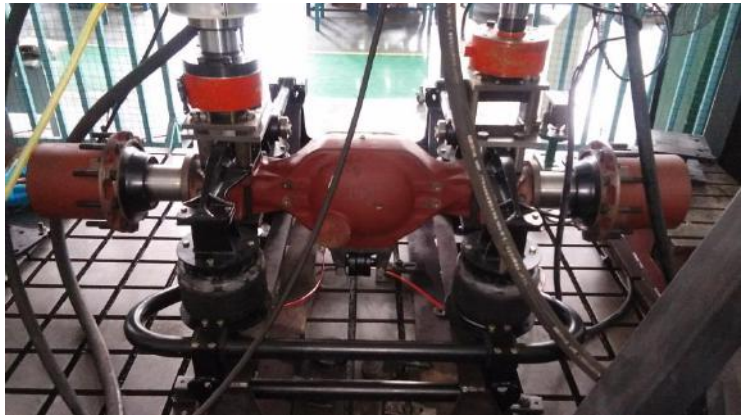

Vertical force condition

Leaf spring assembly design verification

- Design verification: performance calculation, CAE analysis
- Bench test verification: parts / system

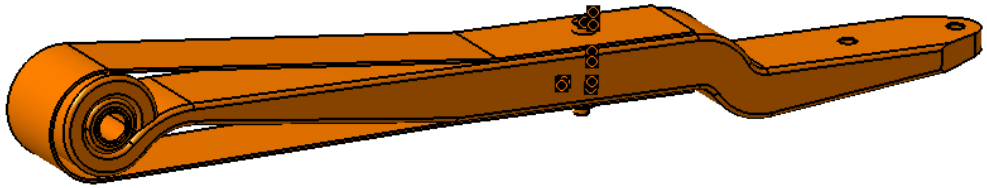

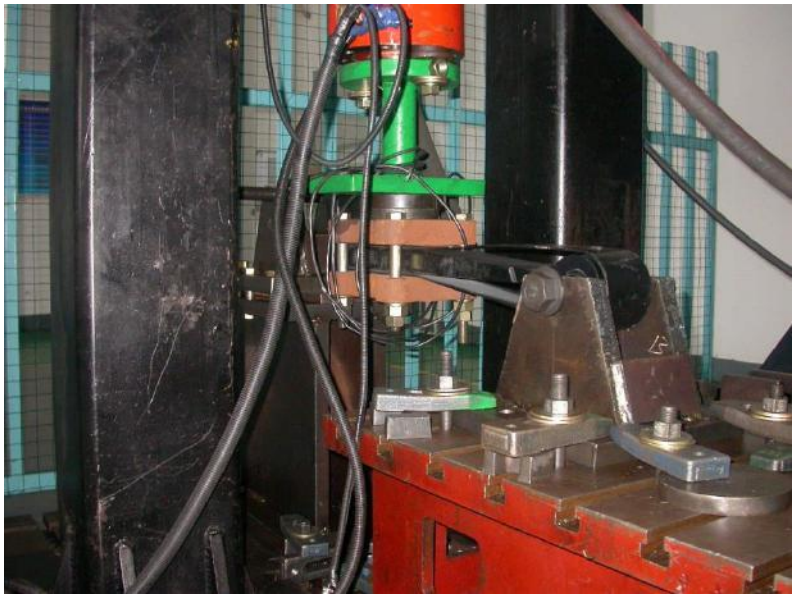

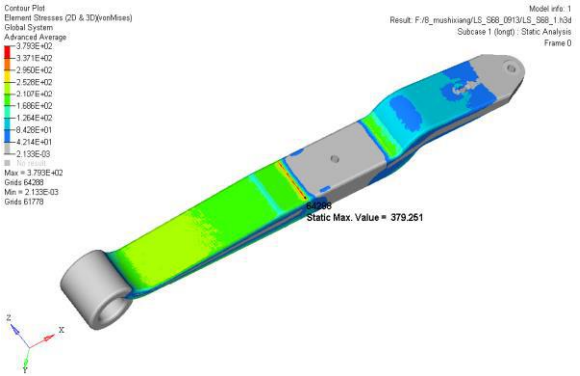

Maximum longitudinal force condition

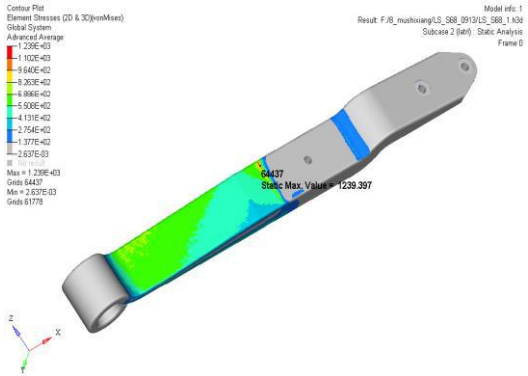

Maximum lateral force condition

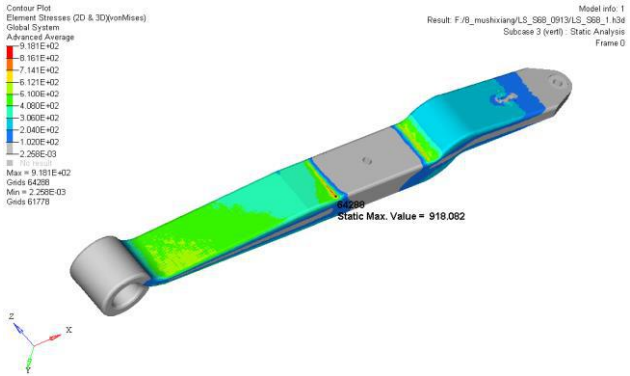

Maximum vertical force condition

IFS for light commercial vehicle

Front independent suspension module
(考斯特平台)

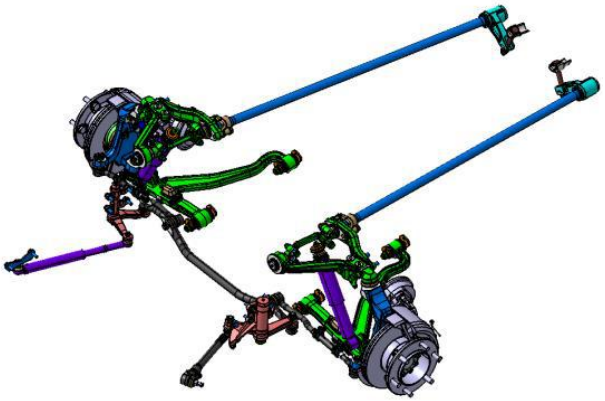

Front independent suspension module
(丰田海狮平台)

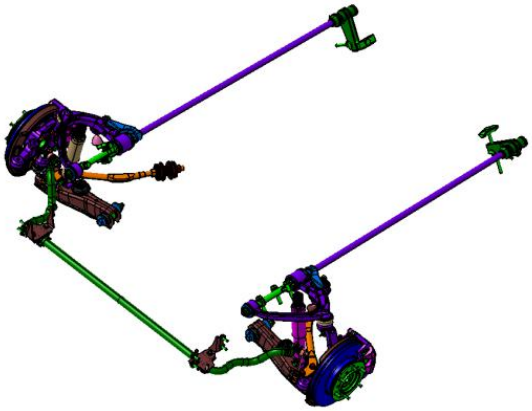

Front independent suspension module
(奔驰凌特平台)

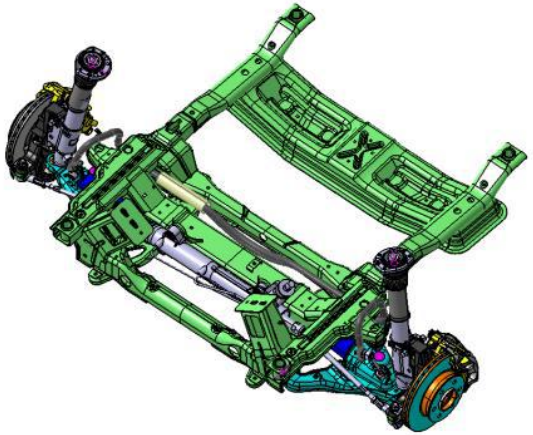

Independent Suspension Platform - Medium Bus（3T～5T）

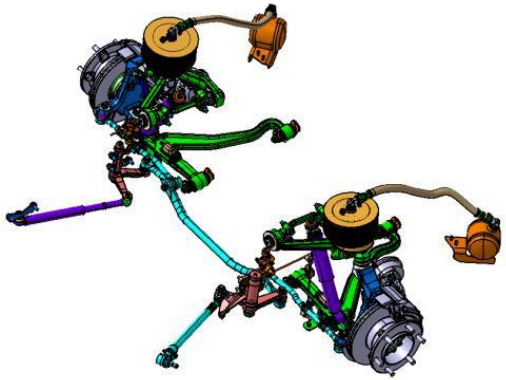

AFD030

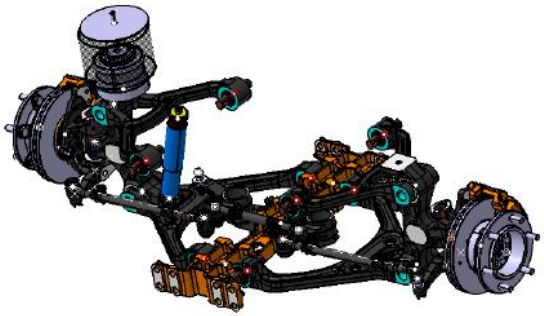

AFD035

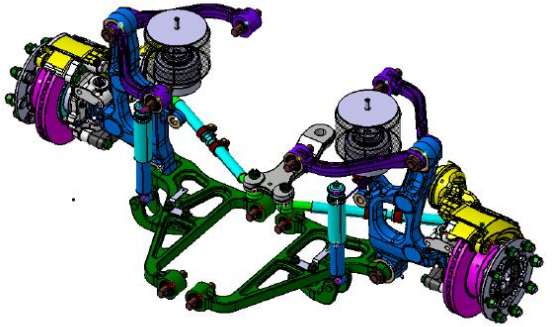

AFD045 免维护

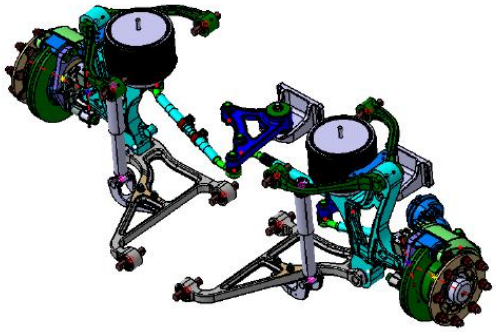

AFD045 公交版

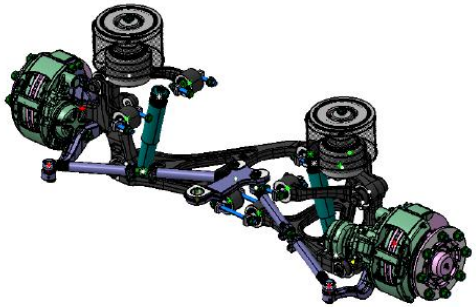

AFD050 旅游版

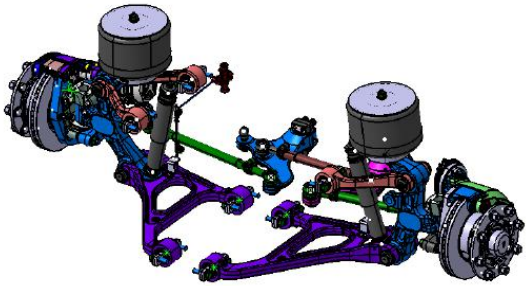

AFD050 公交版

Independent Suspension Platform - Large Bus（7T ~ 7.5T）

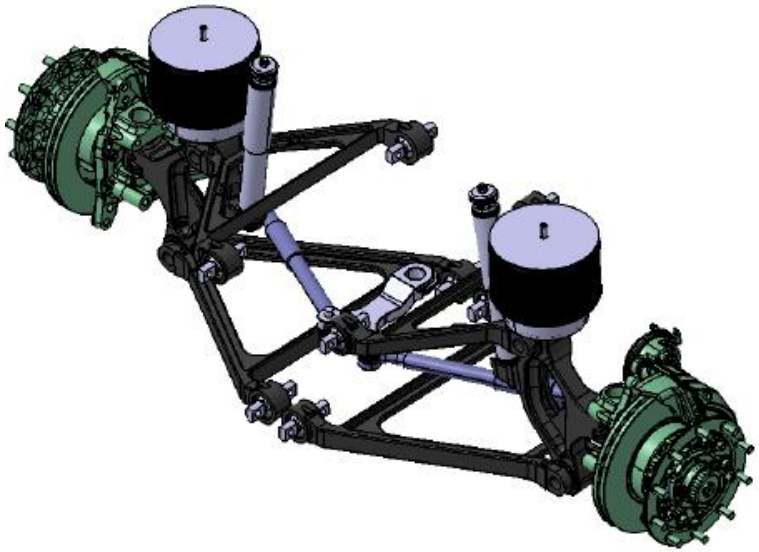

AFD070



AFD075

7m ~ 9m medium bus platform

Front Air Suspension System

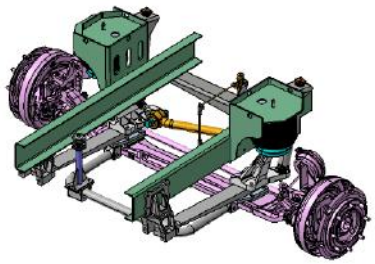

平板簧(球铰）结构

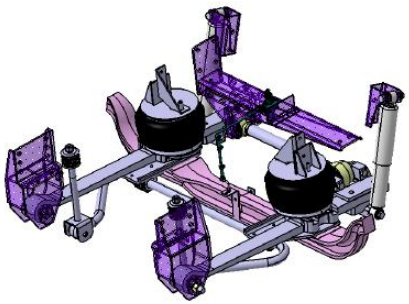

平板簧（衬套）结构

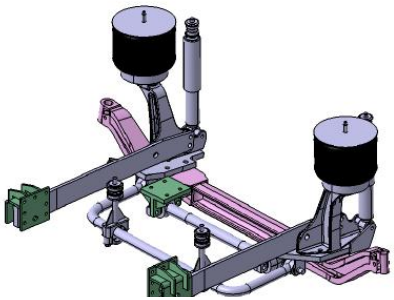

立板簧结构

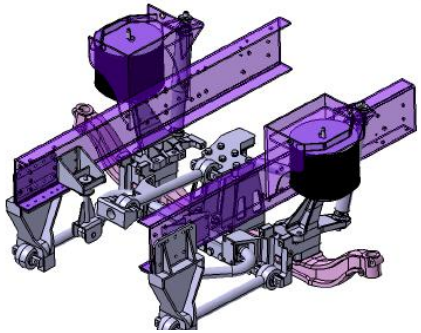

五连杆结构

Rear Air Suspension System

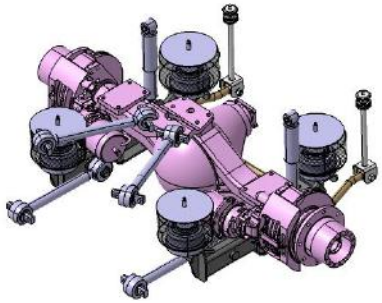

均衡梁 结构

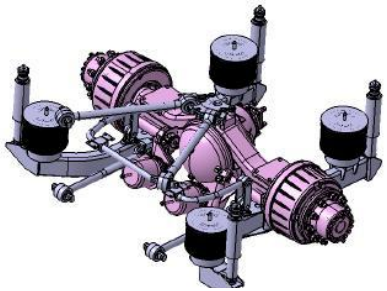

小C型梁结构

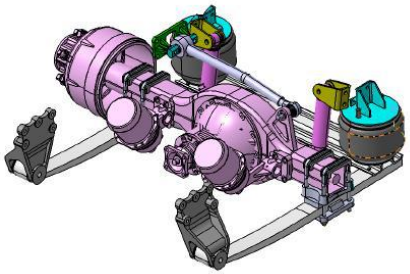

平板簧结构

10m ~ 18m big bus

Front Air Suspension System

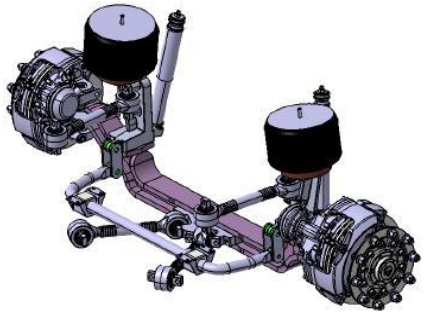

四连杆结构

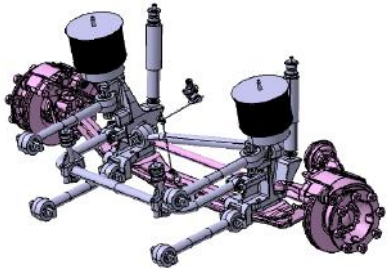

五连杆结构

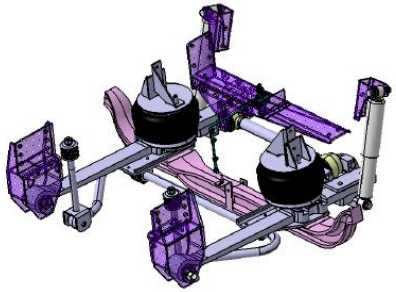

平板簧结构

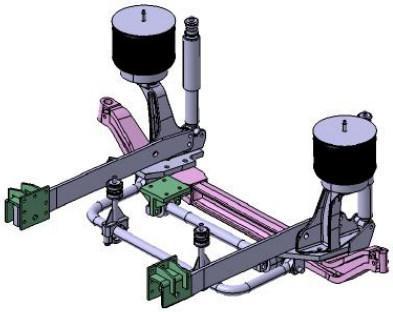

立板簧结构

Rear Air Suspension System

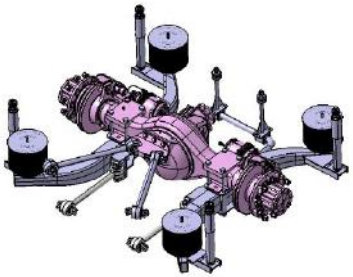

C型梁结构

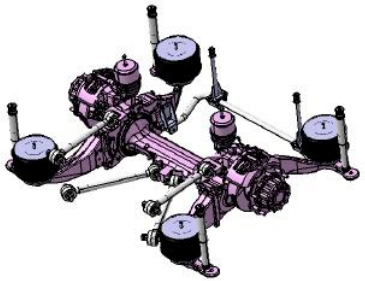

门式桥结构

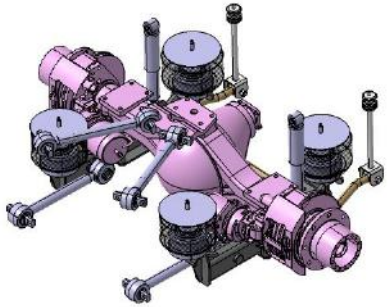

轻型均衡梁结构

Heavy truck air suspension platform

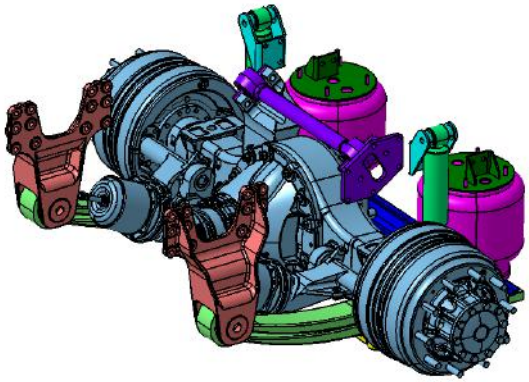

4×2

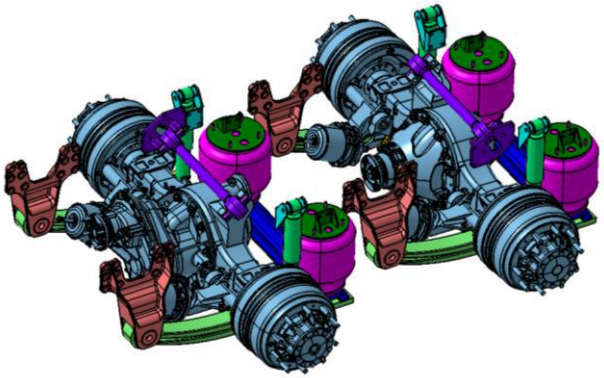

6×4 or 8×4

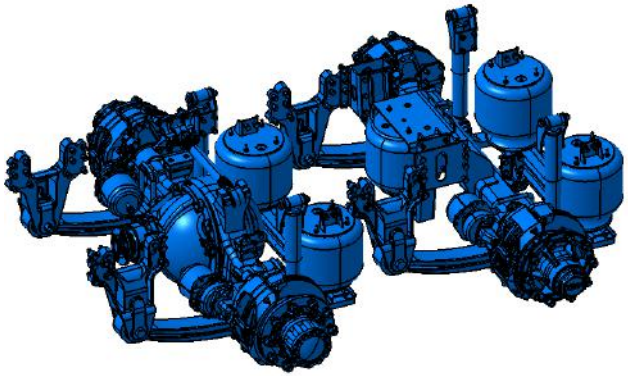

6×2 or 8×2

Heavy truck air suspension platform-4 airbag / 8 airbag air suspension

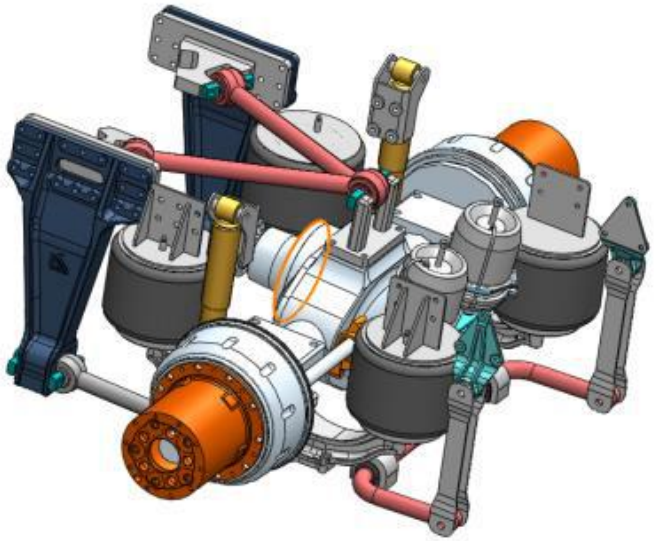

4×2车型

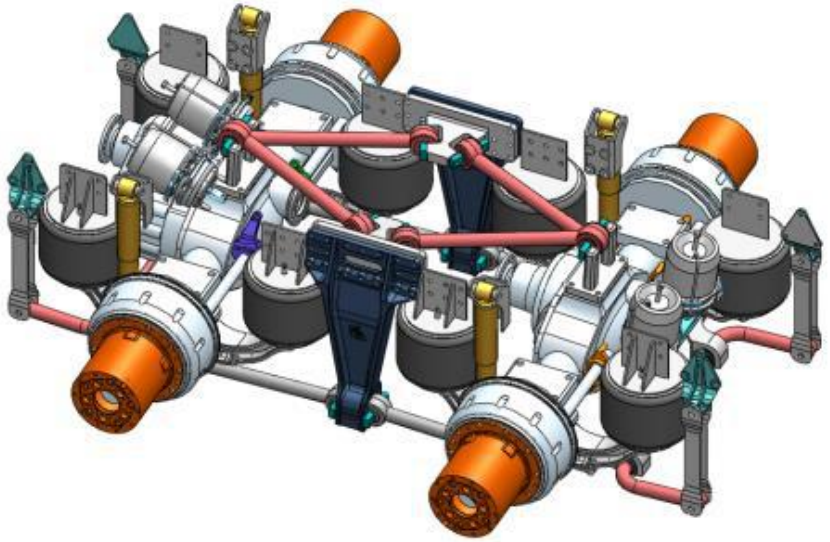

6×4车型

Heavy truck air suspension platform - sheet torsion spring structure air suspension

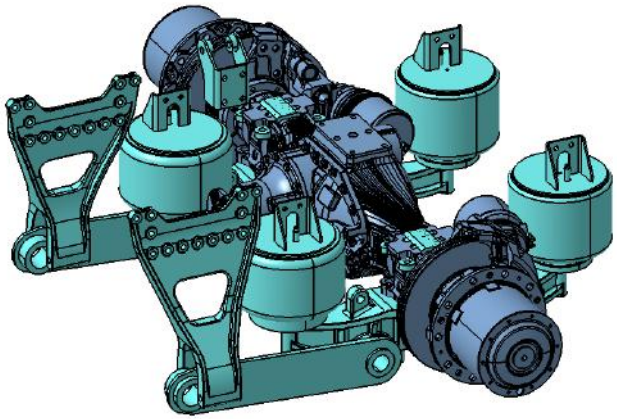

4×2车型

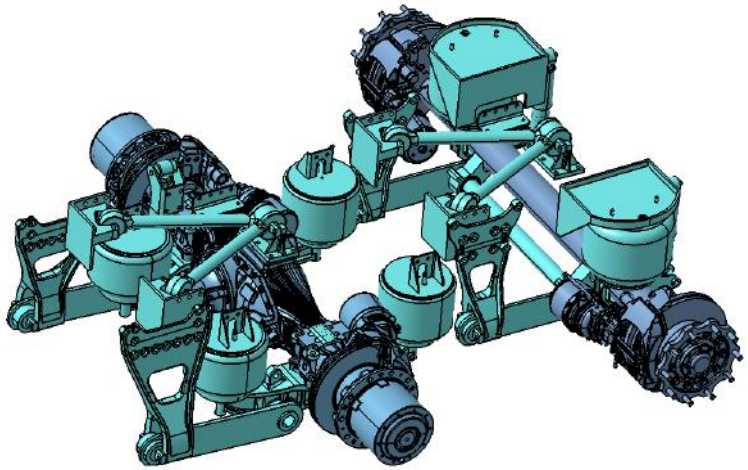

6×2车型

Semi-trailer air suspension platform

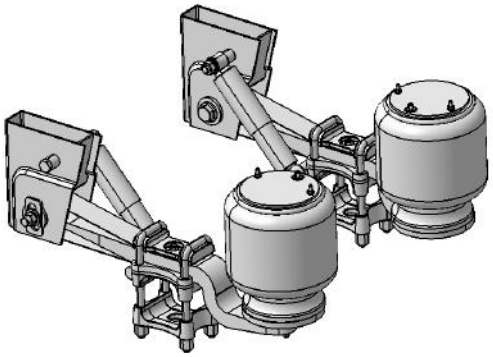

Standard
With or without lifting

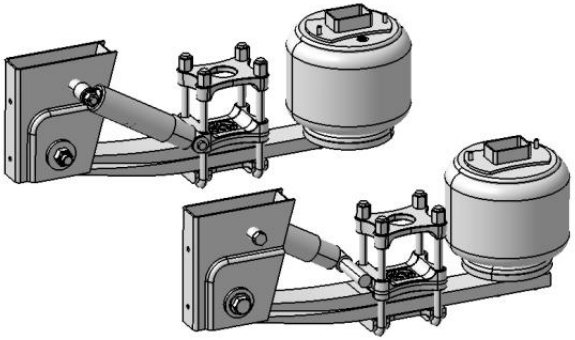

Low floor
With or without lifting

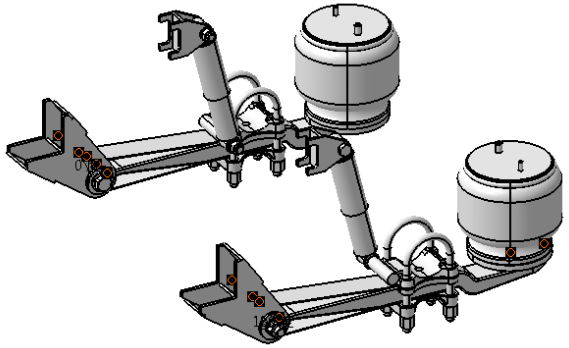

Center axle trailer platform

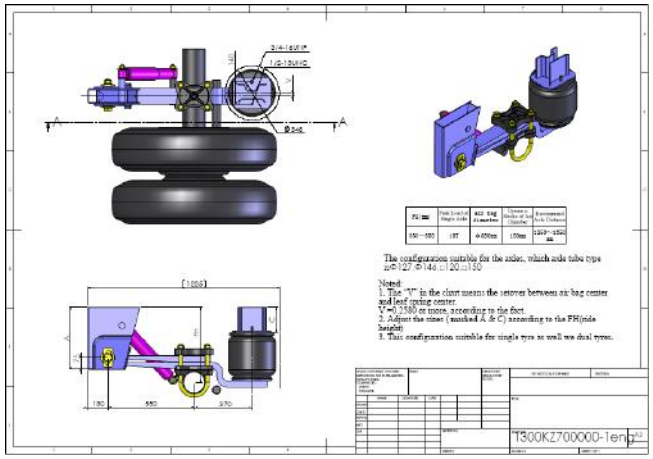
T300KZ700000-1eng

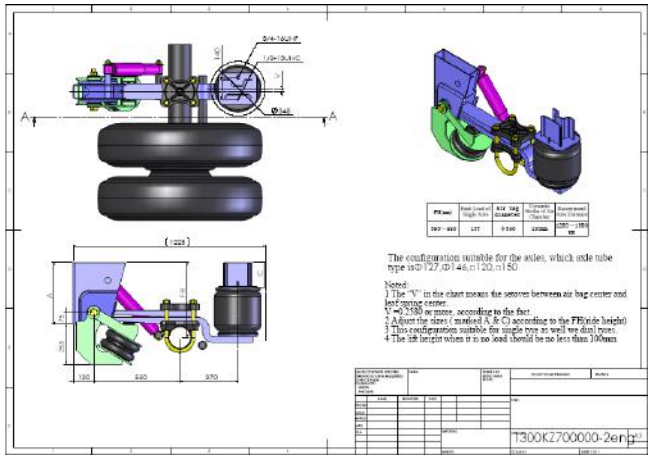
T300KZ700000-2eng

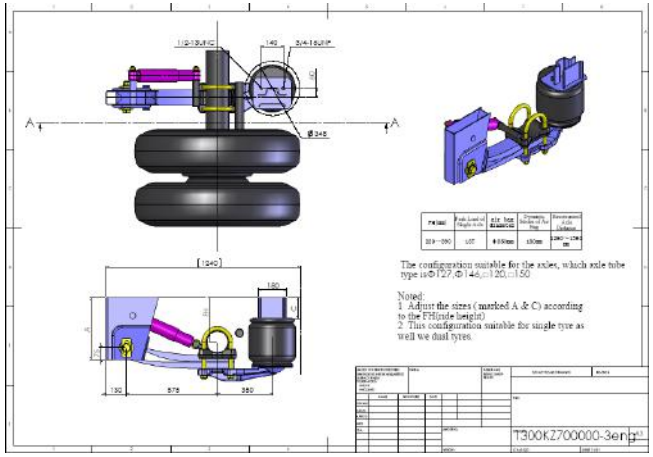
T300KZ700000-3eng

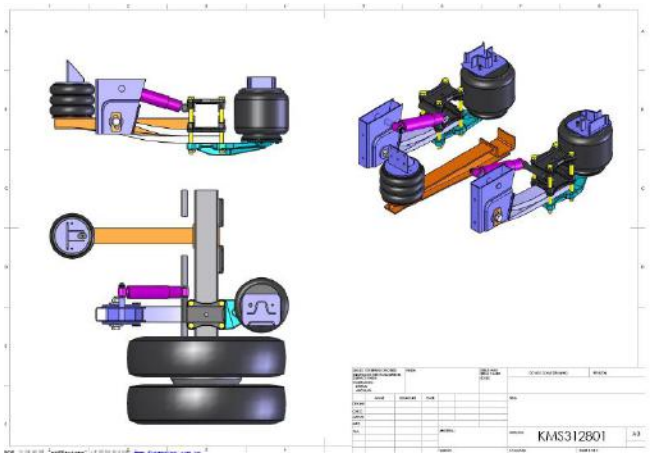
KMS312801

Bus OEM Customers in China











































Truck

中国重汽 SINOTRUK

中国兵器工业集团 北奔重型汽车集团有限公司 BEIBEN TRUCKS GROUP CO.,LTD

JAC 江淮汽车

陕汽重卡 品质成就未来

IVECO 南京依维柯

AUMAN 欧曼

联合卡车 C&C TRUCKS

Trailer

广州番禺超人运输设备实业有限公司 Guangzhou Panyu Superman Transport Equipment Co.,Ltd

中国重汽 SINOTRUK 中国重汽集团湖北华威专用汽车有限公司 SINOTRUK HUBEI HUAWIN SPECIAL VEHICLE CO.LTD

LOHR TIANJIN CHINA 天津劳尔工业有限公司 TIANJIN LOHR INDUSTRIAL CO.,LTD.

镇江市宝华半挂车配件有限公司

哈尔滨建成北方专用车有限公司 Harbin Jiancheng North Special Auto Co., Ltd.

黄海汽车

昌骅

CIMC 中集车辆 青岛中集专用车有限公司

广通汽车 GUANGTONG AUTOMOBILE

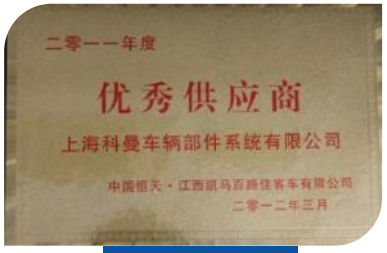

Sino-truck



Sino-truck





Higer



Foton







Thanks

Anne Zhang
Mobile: +86 188 2115 0267
Email:18821150267@shkomm.com
Shanghai Komman Vehicle Component & System Co., Ltd.
上海科曼车辆部件系统股份有限公司
No.1399,Xindian Road, Jiading District,
Shanghai（ 201815）
上海市嘉定区新甸路1399号