Shanghai Komman Vehicle Component System Co., Ltd





1. Komman Introduction
2. Project Introduction
3. Process Introduction
4. Development Examples
5. Cooperative Partner



- Company headquarters: Shanghai, China (production base: Suzhou)）
- Established: November 2001
- Registered capital: 5,861.16 million CNY.
- Production capacity: annual production of 40,000 sets / set of air suspension,600,000 pieces of aluminum alloy structural parts .
- Number of employees: 328 people in total Among them, 68 people

- **Shanghai High-tech Enterprise**
- **Shanghai Little Giant Incubation Enterprise**
- **Shanghai Patent Work Cultivation Enterprise**
- **Jiading District Patent Work Pilot Enterprise**
- **Jiading District Enterprise Technology Center**
- **Shanghai famous trademark**

- ISO 9001:2000 Standard Certification - September 2006
- OSI/TS 16949 certification - September 2008
- ISO 14001:2004 Environmental Management System - September 2012
- OHSAS18001: 2007 Occupational Health and Safety Management System Certification - September 2012



2001-11 Establish

2005-9 Recognize as "Shanghai High-tech Enterprise"

2011-12 Restructured into" company"

2012-10 Listed on the "New Third Board"

2013 Sales exceeded 200 million CNY **Komman NO.1**

2015 Sales exceeded 300 million CNY **Industry Leader**

2016 Sales exceeded 500 million CNY

2017 Sales exceeded 620 million CNY. **5 years Industry Leader**

Existing business structure of Komman

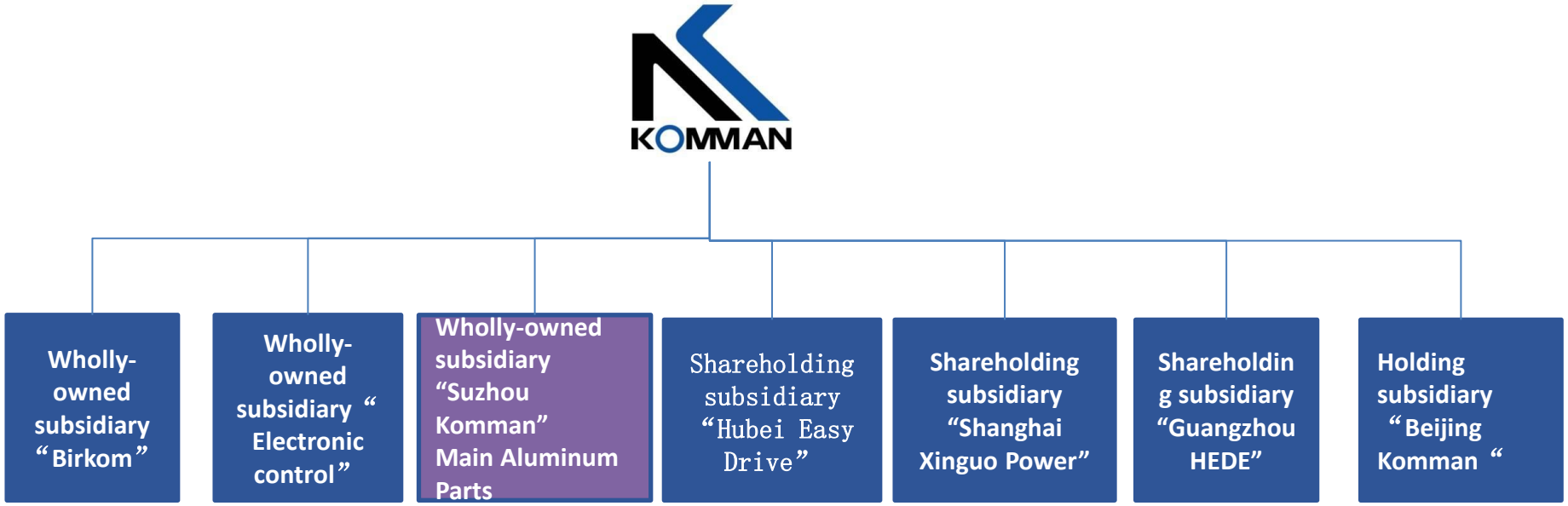

Taking the leading extrusion aluminum technology in China as the core, system integration development as the driving force, integrating relevant industry partners, providing aluminum alloy lightweight solutions and products for the OEM.

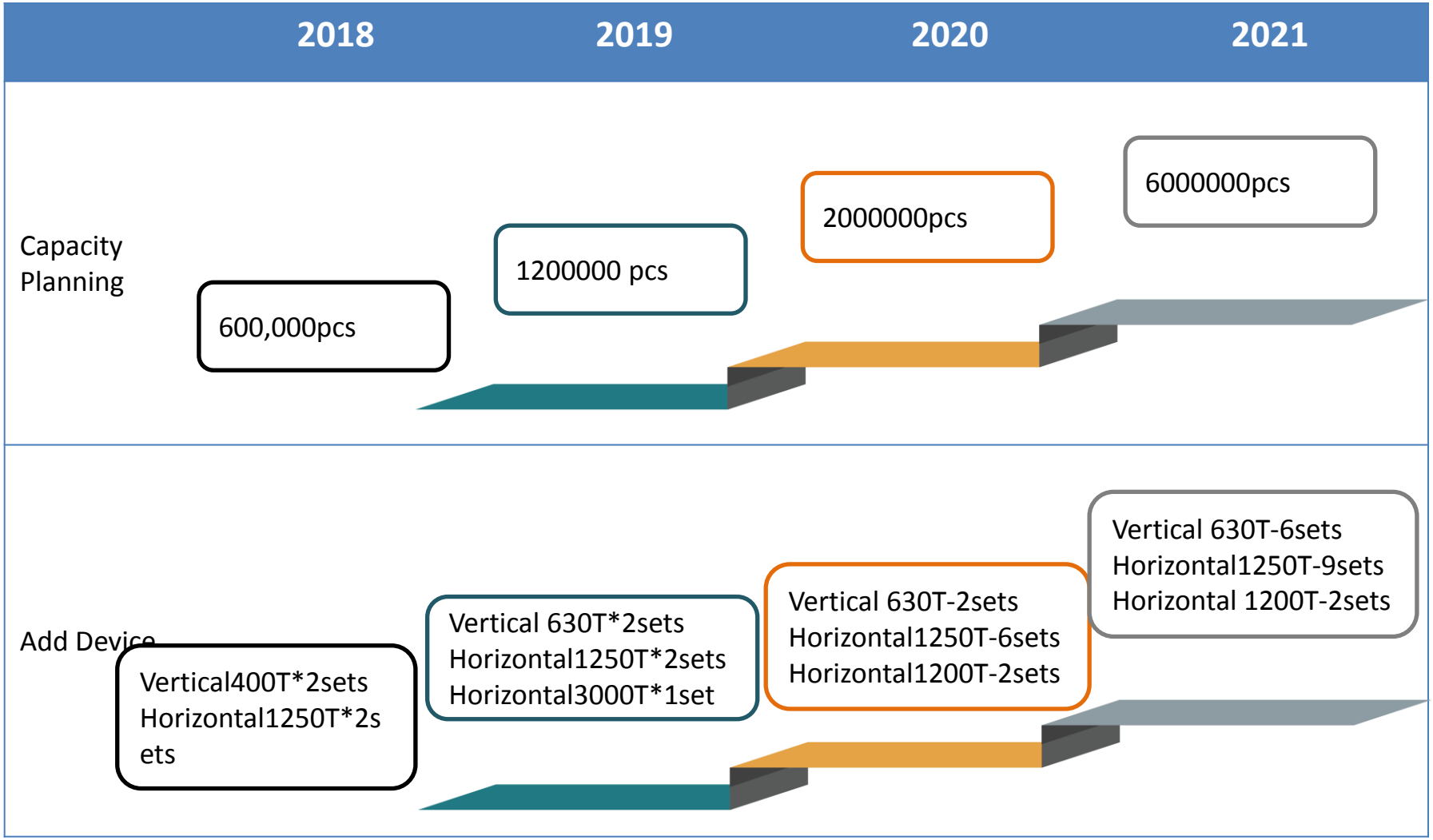
2018
2019
2020
2021
Capacity Planning
600,000pcs
1200000 pcs
2000000pcs
6000000pcs
Add Device
Vertical400T*2sets
Horizontal1250T*2sets
Vertical 630T*2sets
Horizontal1250T*2sets
Horizontal3000T*1set
Vertical 630T-2sets
Horizontal1250T-6sets
Horizontal1200T-2sets
Vertical 630T-6sets
Horizontal1250T-9sets
Horizontal 1200T-2sets

Passenger Vehicle Field

Product Name: Steering Knuckle
Material: A356 Heat Treatment: T6
Application model: passenger car
Special requirements: high strength, fatigue resistance
Performance: tensile strength ≧320MPa, yield ≧250MPa, elongation ≧10%



Product Name: Control Arm
Material: A356 Heat Treatment: T6
Application model: passenger car
Special requirements: high strength, fatigue resistance
Performance: tensile strength ≧320MPa, yield ≧250MPa, elongation ≧10%



Product Name: Control Arm
Material: A356 Heat Treatment: T6
Application model: passenger car
Special requirements: high strength, fatigue resistance
Performance: tensile strength ≧320MPa, yield ≧250MPa, elongation ≧10%



Product Name: Steering Knuckle
Material: A356 Heat Treatment: T6
Application model: passenger car
Special requirements: high strength, fatigue resistance
Performance: tensile strength ≧320MPa, yield ≧250MPa, elongation ≧10%



Passenger Vehicle Field

Product Name: Suspension bracket
Material: A356 Heat Treatment: T6
Application model: commercial vehicle
Special requirements: high strength, fatigue resistance
Performance: tensile strength ≧320MPa, yield ≧250MPa, elongation ≧10%



Product Name: Airbag support
Material: A356 Heat Treatment: T6
Application model: medium and large passenger cars
Special requirements: high strength, fatigue resistance
Performance: tensile strength ≧310MPa, yield ≧250MPa, elongation ≧8%



Product Name: Airbag support arm
Material: A356 Heat Treatment: T6
Application model: commercial vehicle
Special requirements: high strength, fatigue resistance
Performance: tensile strength ≧320MPa, yield ≧250MPa, elongation ≧8%

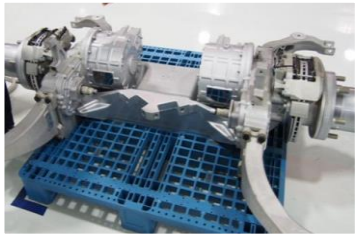

Product Name:Boom
Material: A356
Heat treatment: T6
Application model: large passenger car independent suspension
Special requirements: high strength, fatigue resistance
Performance: tensile strength ≧320MPa, yield ≧250MPa, elongation ≧8%



Special Vehicle Field

Product Name: Suspension Bushing External Skeleton
Material: A356+40Cr (pre-nut)
Heat treatment: T6
Application model: heavy truck
Special requirements: high strength, fatigue resistance
Performance: tensile strength ≧320MPa, yield ≧250MPa, elongation ≧8%



Product Name: Lifting arm
Material: A356 Heat Treatment: T6
Application model: military vehicle
Special requirements: high strength, fatigue resistance
Performance: tensile strength ≧320MPa, yield ≧250MPa**, elongation ≧10%**



Product Name: Reducer housing
Material: A356 Heat Treatment: T6
Application model: military vehicle
Special requirements: high strength, high air tightness
Performance: tensile strength ≧320MPa, yield ≧250MPa, elongation ≧10%



Product Name: Spring Spring Seat
Material: A356 Heat Treatment: T6
Application model: commercial vehicle
Special requirements: high strength, fatigue resistance
Performance: tensile strength ≧320MPa, yield ≧250MPa, elongation ≧10%

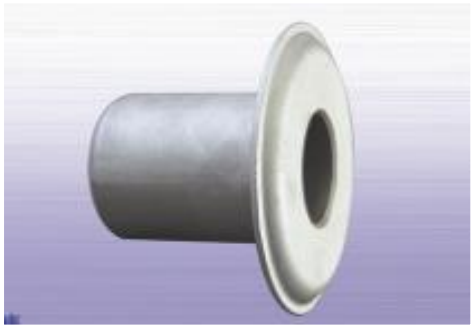

Others

Product Name: Air Conditioner

Compressor Housing

Material: ADC12 Heat Treatment: NC

Application model: General

Special requirements: wear resistance,

high air tightness



Product Name: Air Conditioner Compressor Housing
Material: ADC12 Heat Treatment: NO
Application model: General
Special requirements: wear resistance, high air tightness



Product Name: Battery Module End Plate
Material: A356 Heat Treatment: T6
Application: New energy battery
Special requirements: no porosity, loose
Performance: tensile strength ≧320MPa, yield ≧250MPa, elongation ≧10%

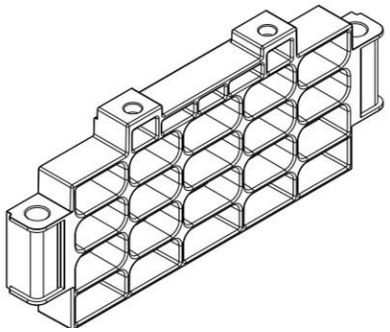

Product Name: New energy battery aluminum alloy case

Application model: new energy vehicle

Special requirements: one-piece molding, high strength ; High air tightness

Remarks: Mass production can be achieved in 2020

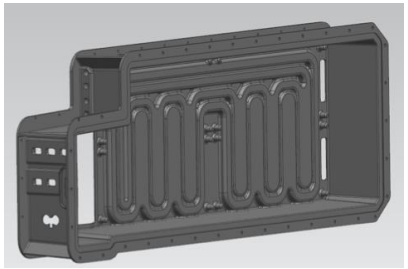

Introduction Of Extrusion Casting Technology

Squeeze casting, also known as melting soup forging in Japan, is based on the principle of applying a large mechanical pressure (about 100 MPa) to a liquid or semi-solid metal entering a cavity to form a solidification and obtaining a casting.

Due to the simultaneous presence of high-pressure solidification and plastic deformation, the structure of the casting is dense, free from defects such as porosity and porosity, and the grain is refined, and the T6 heat treatment can be performed, which is an excellent process for achieving weight reduction. Low-speed filling and high-pressure solidification are typical features of the extrusion casting process.

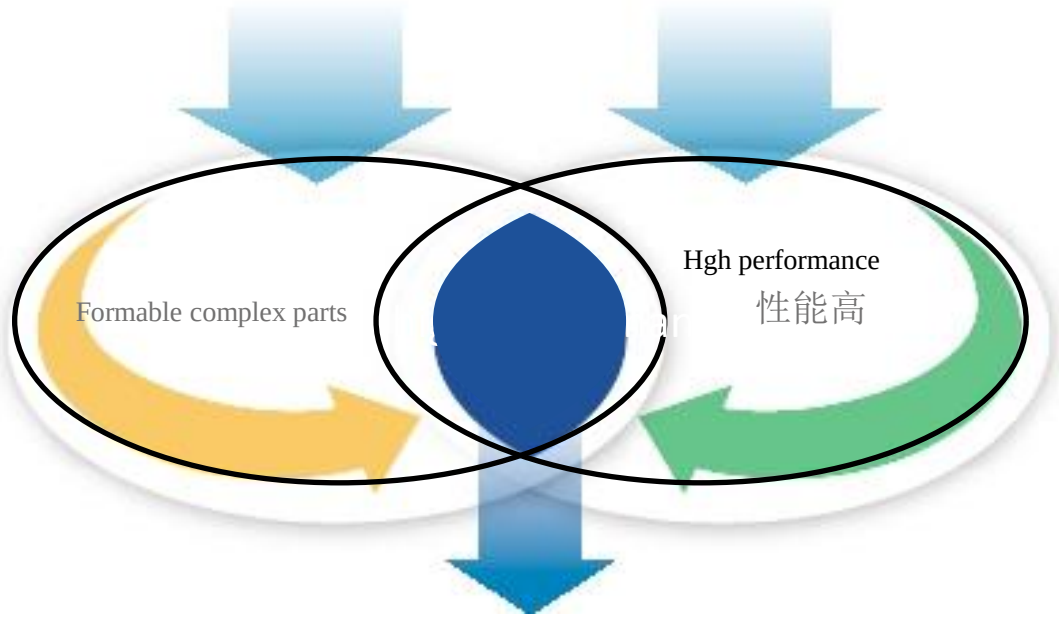

Compact and complex liquid forgings

Introduction of extrusion casting technology

Liquid die forging (squeeze casting)

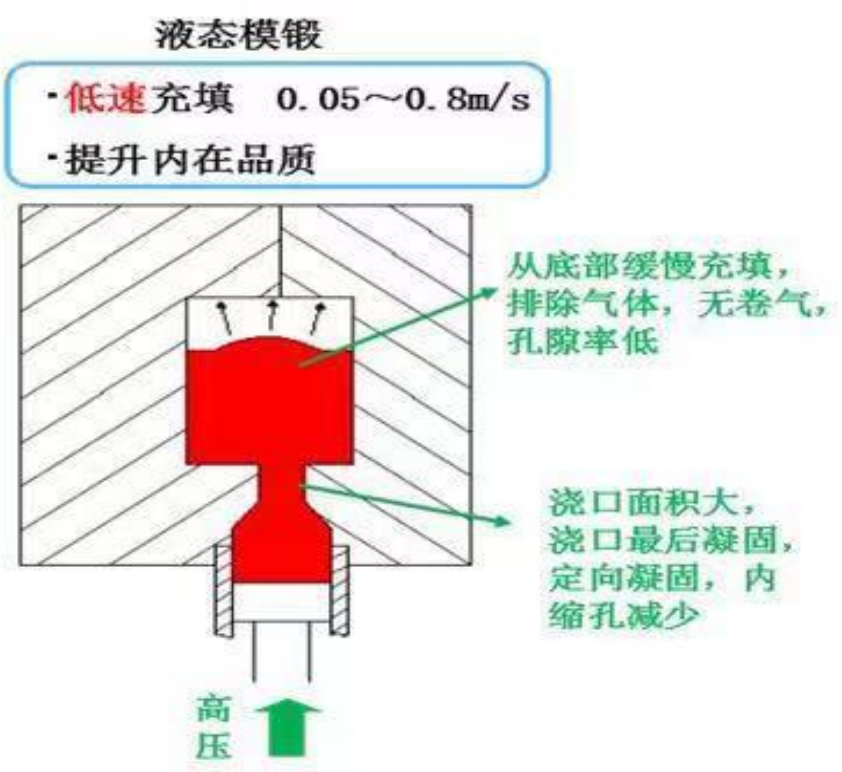

Squeeze casting compared to other casting methods

Index	Squeeze Casting	Gravity Casting	Low Pressure Casting	High Pressure Casting
Mmechanical Character	High	Medium	Medium	Low
Casting quality	Fine grain, dense structure and good air tightness	Fine grain, dense structure and good air tightness	structure and good air tightness	Fine grain, internal pores, dense
Heat treatment	Solid solution （T6）	Solid solution （T6）	Solid solution （T6）	NO
Surface Quality	High	Medium	Medium	Medium
production efficiency	High	Low	Medium	High
Equipment cost	High	Medium	Medium	High

Squeeze Casting Technology Application Field

Application field	Code
Automotive force parts	Aluminum and aluminum-based composite pistons, aluminum alloys and magnesium alloy wheels, beams, knuckles, lower arms, brake calipers, engine mounts, gearboxes, air compressor linkages
Automotive pressure-resistant, airtight parts	Air-conditioner compressor scroll, cylinder block, front and rear cover, steering valve housing, oil pump, manifold, fuel distribution pipe, brake cylinder, clutch cylinder
Automotive wear parts	Fork, pump housing, rocker arm, track shoe, air compressor piston and swashplate aluminum-based composite brake hub
Motorcycle force parts	Aluminum alloy and magnesium alloy wheel hub, upper and lower joint plate, transmission case, rear hanger, crank, frame body, handlebar head, frame joint, direction shaft
Motorcycle pressure and wear parts	Aluminum piston, shock absorber, disc brake pump body
Electrical parts	Disk drive enclosure, electrical spindle bushing, electrical compression ring, image drum, sonar housing, heating plate, computer parts, motor rotor
Other mechanical aluminum alloy other material parts	Disk drive enclosure, electrical spindle bushing, electrical compression ring, image drum, sonar housing, heating plate, computer parts, motor rotor

Process Introduction

New Product Development Process

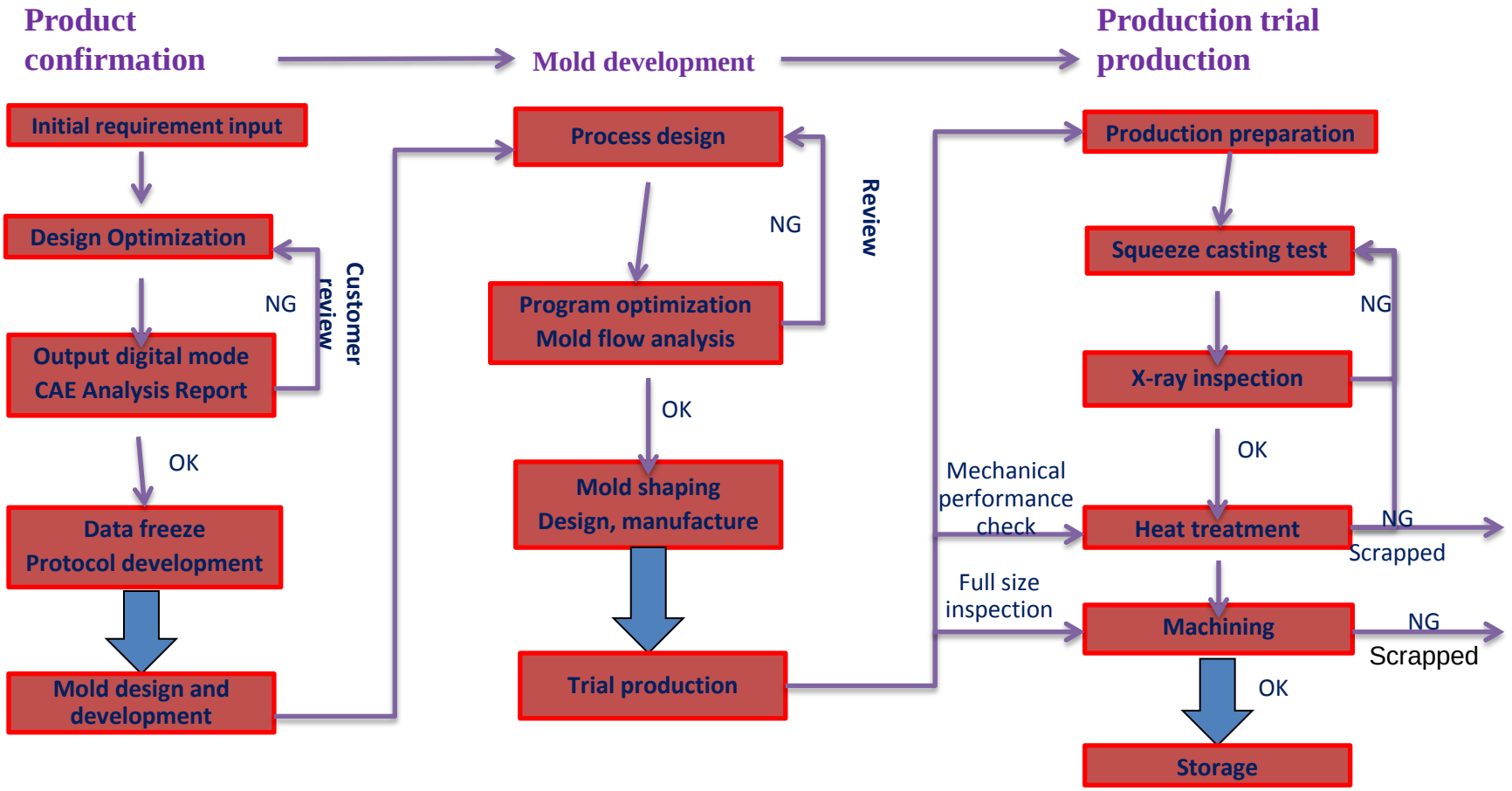

New product development process

客户图纸之一。。。

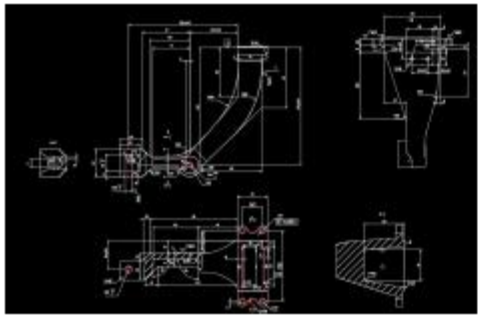

手工件制作

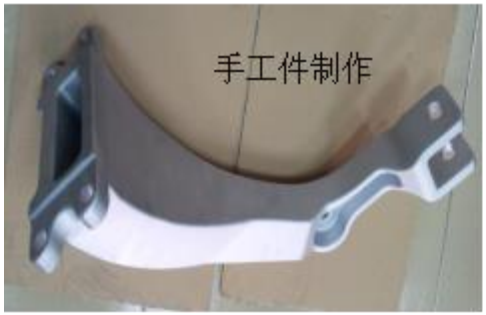

配合进行产品优化、CAE分析

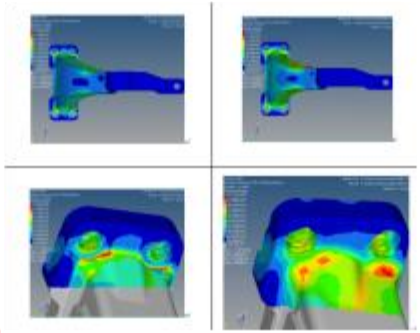

模具CAE分析（模流分析）



产品试制



台架试验验证



Process Introduction

科曼股份
430156



Raw Material



Dissolve



Mould



Shaping

Polishig

Product shot blasting



Heat Treatment



Maching



Delivery

产品的制造工程概要

Knuckle Control Arm Development Case Introduction





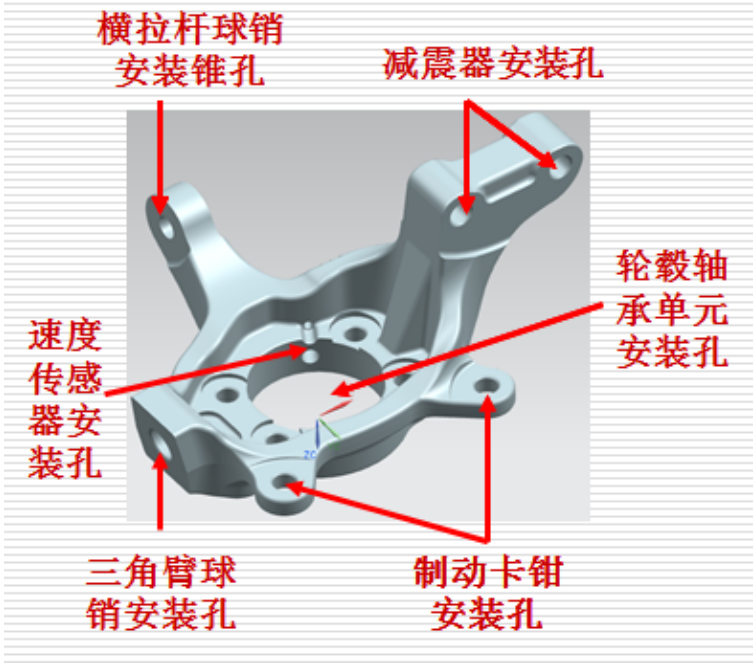

Steel

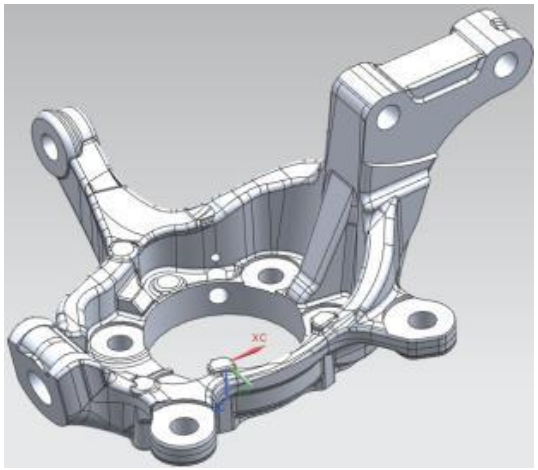

Material：QT450-10
Quality： 4.9kg
Yield：
Tensile：450MPa

Aluminum Alloy

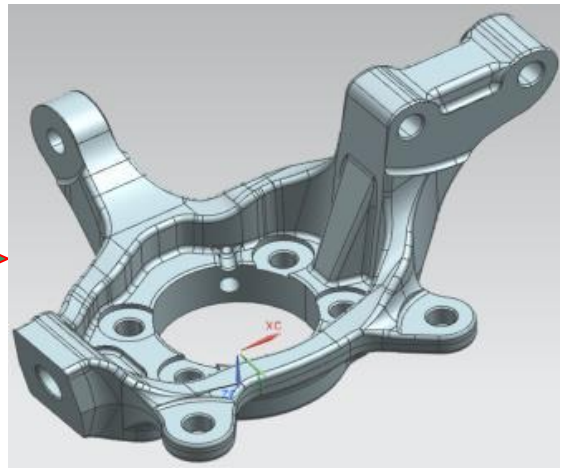

Material：A356
Quality： 2.17kg（44.3%P0）
Yield：250MPa
Tensile：320MPa

Mold Debugging

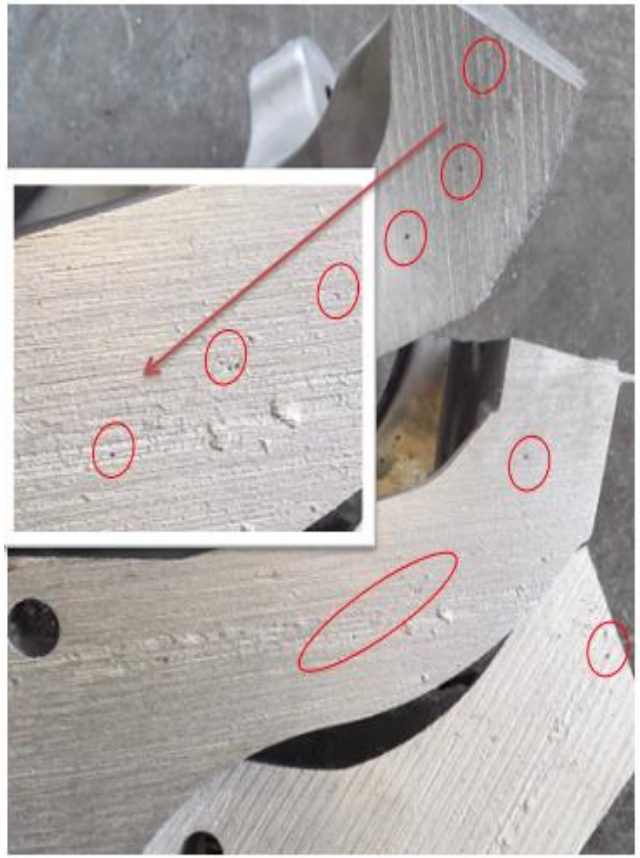

When the cooling is turned off in the early stage and the partial extrusion is not verified, the thickness is mostly reduced, but they are all within the 2nd stage.



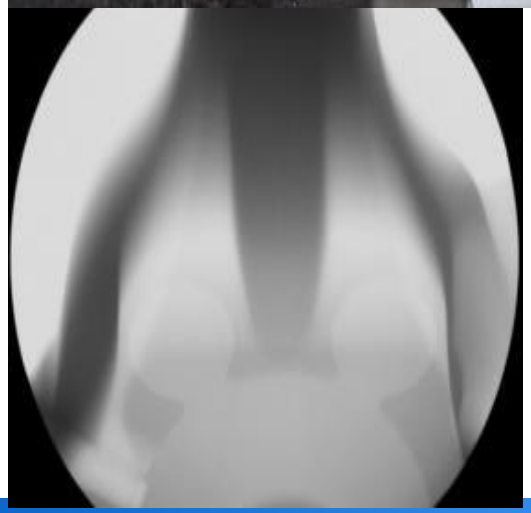

Through the extrusion parameters, cooling scheme, local extrusion adjustment, the problem of shrinkage of most of the thickness is solved

Bulk sampling material performance

A356.2 – T6 (ASTM)

机械性能	设计要求	本体取样平均	备注
抗拉强度	303 MPa	310 MPa	
屈服强度	230 MPa	240 MPa	
延 伸 率	10%	11%	
硬 度	〉90 HBS	115HBS	



Part Quality Reference Standard: ASTM B969 / B969M – 14

The casting is subjected to shot blasting and is carried out in accordance with the provisions of GB 6060.5.

The surface roughness of the casting is carried out in accordance with the provisions of GB 6060.1.

The dimensional tolerance of castings must meet the requirements of GB 6414 in addition to the special requirements of the drawings.

Other requirements as required by the agreement

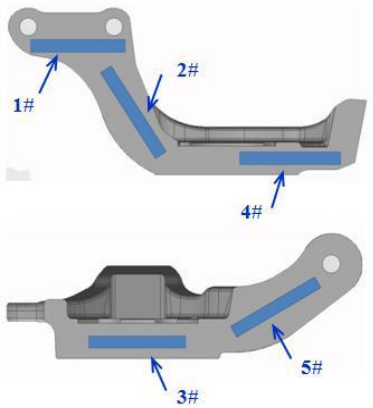

Cooperative Partner



联系我们

Anne| 张小莉

Mobile: +86 188 2115 0267

Email:18821150267@shkomm.com

Shanghai Komman Vehicle Component & System Co., Ltd

上海科曼车辆部件系统股份有限公司

No.1399,Xindian Road, Jiading District,

Shanghai（201815）

上海市嘉定区新甸路1399号



轻量化技术（挤压铸造）