SOLARBORN
BORN FOR THE SUN



POLY 36 SERIES

SLB36P6-135

Polycrystalline

PV Module

©COPYRIGHT 2021 SOLARBORN

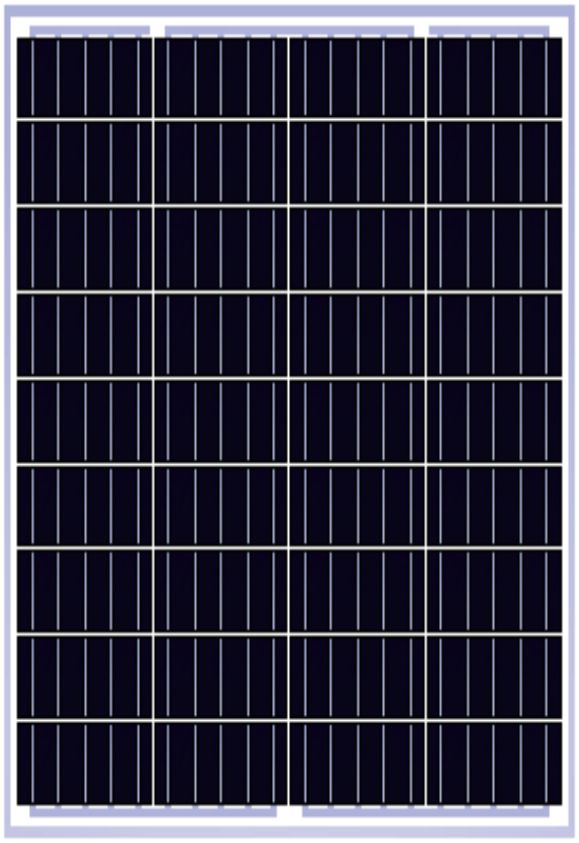

PID FREE
POTENTIAL INDUCED DEGRADATION (PID) FREE GUARANTEED

LONG-TERM STABLE POWER OUTPUT
RELIABLE QUALITY LEADS TO A BETTER SUSTAIN-ABILITY EVEN IN HARSH ENVIRONMENT LIKE DESERT, FARM AND COASTLINE

HIGH EFFICIENCY POSITIVE TOLERANCE
STABLE PANELS WITH HIGH EFFICIENCY, PERC CELLS

EXCELLENT RESISTANCE AGAINST EXTREME WEATHER
POWER OUTPUT IN WEAK LIGHT CONDITION, SUCH AS HAZE, CLOUDY, AND MORNING

LOW CARBON EMISSION
SOLAR POWER IS THE CLEAN AND RENEWABLE ENERGY
LOW CARBON EMISSION GREAT FOR ENVIRON-

COST EFFICIENCY
COST EFFICIENCY CAN BE ESTIMATED FOR FUTURE INCOME

02 YEARS
LIMITED PRODUCT WARRANTY

25 YEARS
LIMITED POWER WARRANTY

ELECTRICAL CHARACTERISTICS

MODULE TYPE	SLB36P6-135
MAXIMUM POWER(W)	135
TOLERANCE WATTAGE(W)	0~+5
OPTIMUM POWER VOLTAGE(VMP)	18.50
OPTIMUM OPERATING CURRENT(IMP)	7.30
OPEN CIRCUIT VOLTAGE(VOC)	22.20
SHORT CIRCUIT CURRENT(ISC)	7.90
MODULE EFFICIENCY (%)	16.17

STC: LRRADIANCE 1000 W/M2, MODULE TEMPERATURE 25 °C, AM=1.5
THE DATA ABOVE IS FOR REFERENCE ONLY AND THE ACTUAL DATA IS ACCORDANCE WITH THE PRATICAL TESTING

TEMPERATURE CHARACTERISTICS

NOCT	45°C+/-2°C
TEMPERATURE COEFFICIENTS OF ISC(%)°C	+0.060
TEMPERATURE COEFFICIENTS OF VOC(%)°C	0.300
TEMPERATURE COEFFICIENTS OF PM(%)°C	-0.400

MECHANICAL CHARACTERISTICS

SOLAR CELL	156.75×130mm
NUMBER OF CELL(PCS)	36(4X9)
SIZE OF MODULE(MM)	1230×668×30mm
FRONT GLASS THIKNESS(MM)	3.2
WEIGHT PER PIECE(KG)	8.6
TEMPERATURE RANGE	-40°C TO +85°C
MAXIMUM SYSTEM VOLTAGE	1000V DC

PACKING

PACKING	CARTON BOX
PIECES PER CONTAINER	2PCS/CARTON

BORN FOR THE SUN
Solarborn Technologies Co.,ltd

DRAWING

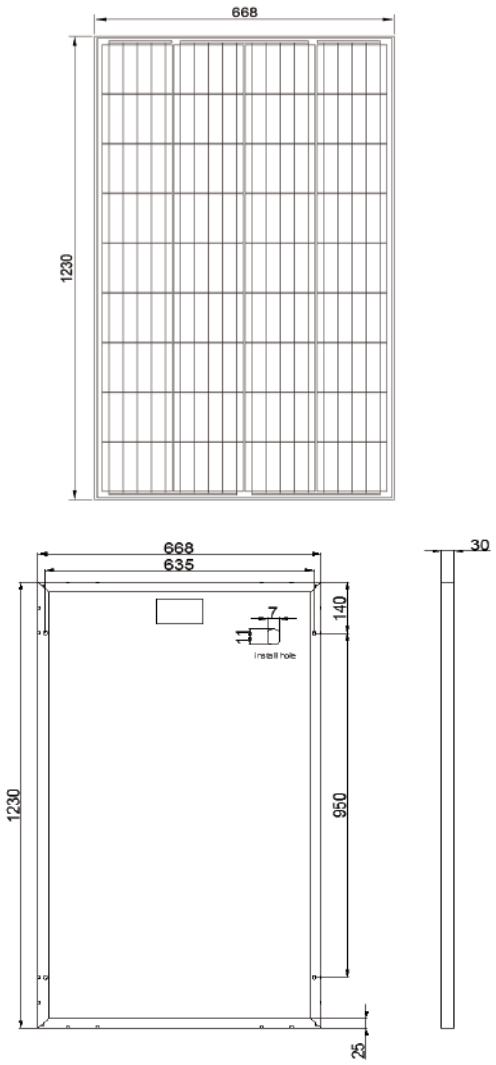

INFORMATION ON HOW TO INSTALL AND OPERATE THIS PRODUCT IS AVAILABLE IN THE INSTALLATION INSTRUCTION.

©SOLARBORN ALL RIGHTS RESERVED.
SPECIFICATIONS INCLUDED IN THIS DATA SHEET ARE SUBJECT TO CHANGE WITHOUT NOTICE.

CERTIFICATIONS
AND STANDARDS
IEC61215 IEC61730