201

ADL3000-E

Installation and operation instruction V3.1

ACREL Co,.Ltd

Declare

The copyright is the property of Acrel. Any information in any paragraph or section cannot be extracted, copied or otherwise reproduced or propagated. Otherwise offenders shall take all consequences.

All rights are reserved.

Acrel reserves the right to modify the product specifications herein without notification. Please consult the local agent about the latest specifications before placing a purchase order.

Content

1 General 1
2 Type description 1
3 Function description 1
4 Technical parameter 2
5 Outline 3
6 Wiring and installing 3
7 Function description 6
8 Operation and display 7
9 Communication description 11

1 General

ADL3000-E is a smart meter designed for power supply system, industrial and mining enterprises and utilities to calculate the electricity consumption and manage the electric demand. It features the high precision, small size and simple installation. It integrates the measurement of all electrical parameters with the comprehensive electricity metering and management provides various data on previous 12 months, checks the 31st harmonic content and the total harmonic content, realizes the remote communication and the remote control with switching input and relay output and boasts the alarm output. It is fitted with RS485 communication port and adapted to MODBUS-RTU. ADL3000-E can be used in all kinds of control systems, SCADA systems and energy management systems. All meters meet the related technical requirements of electricity power meter in the IEC62053-21、IEC62053-22 standards.

2 Type description

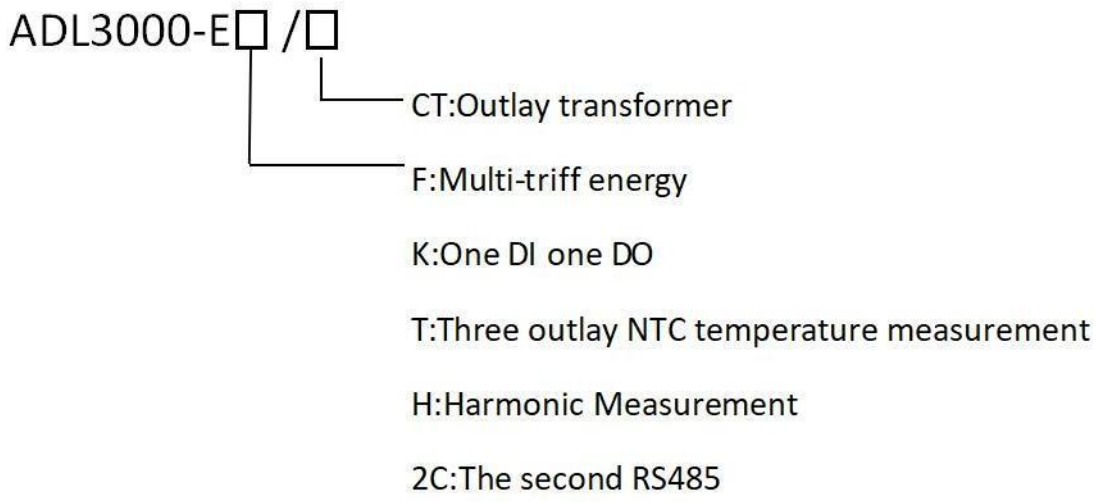

3 Function description

Function	Function description	Function provide
Measurement of kWh	Active kWh (positive and negative)	■
	Reactive kWh (positive and negative)	■
	A, B, C phase positive active kWh	■
Measurement of electrical parameters	U、IP、Q、S、PF、F	■
		■
Measurement of	2~31ST Voltage and current harmonic	□Note 1
LCD Display	8 bits section LCD display, background light	■
Key programming	4 keys to communication and set parameters	■
Pulse output	Active pulse output	■
	Reactive pulse output	□Note 2

	Clock pulse output	□Note 2
Multi-tariff and functions	Active switch input	□Note 3
	Switch output	□Note 2
	Adapt 4 time zones, 2 time interval lists, 14 time interval by day and 4 tariff rates	□
	Max demanded kWh and time happened	□
	Frozen data on last 48 months, last 90days	□
	Date, time	□
Communication	Infrared communication	■
	The first communication path: Communication interface: RS485, Communication protocol: MODBUS-RTU	□
	The second communication path: Communication interface: RS485, Communication protocol: MODBUS-RTU	□Note 3
Temperature measurement	Support 3 outlay NTC temperature	□Note 4

"■" means standard, "□" means optional.

Note:

1: Harmonic is a standard while choosing outlay transformer, optional for other situation.2: Reactive pulse output, clock pulse output and switching output: Choose one of these three.

3: Active switching, the second communication path: Choose one of these two.4: Both 1 and 2 cannot be chosen while choosing temperature measurement.

4 Technical parameter

Specification		3 phase 3 wires, 3 phase 4 wires
Voltage	Reference voltage	3×100V、 3×380V、3×57.7/100V、 3×220/380V
	Consumption	<10VA(Single phase)
	Impedance	>2MΩ
	Accuracy class	Error±0.2%
Current	Input current	3×1(6)A，3×1(6)A(Outlay transformer)，3×10(80)A，3×10(100)A(Outlay transformer)
	Consumption	<1VA(Single phase rated current)
	Accuracy class	Error±0.2%
Power		Active, reactive, apparent power, error±0.5%
Frequency		45～65Hz， Error±0.2%
Temperature		-40℃～99℃
Energy		Active energy(Accuracy class:0.5S), reactive energy(Accuracy class 2)
Clock		≤0.5s/d
Energy pulse output		1 active optocoupler output, 1 reactive optocoupler output
Switching output		1 Switching output
Switching input		1 optocoupler input

Width of pulse	80±20ms
Pulse constant	6400imp/kWh,400imp/kWh(Correspond with the basic current)
Interface and communication	RS485：Modbus RTU
Range of communication address	Modbus RTU:1~ 247；
Baud rate	1200bps~19200bps
Relative temperature	-25℃~+55℃
Relative humidity	≤95%(No condensation)

5 Dimension drawings

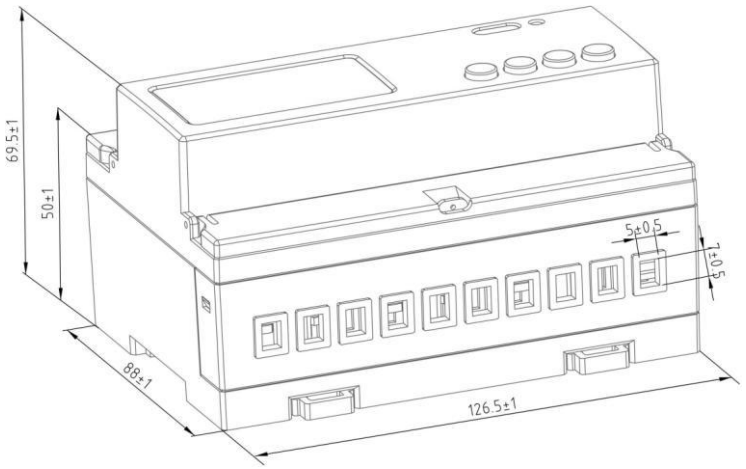

Fig1 connect via CT

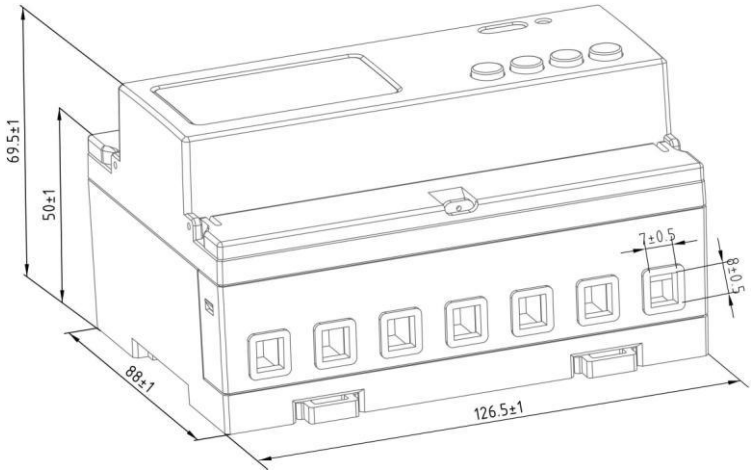

Fig2 direct connect

Note：The torque of direct connect should not be greater than 4.0N ṁ，and the torque of connect via CT should not be greater than 2.0N ṁ。

6 Wiring and installing

Wiring sample of voltage and current

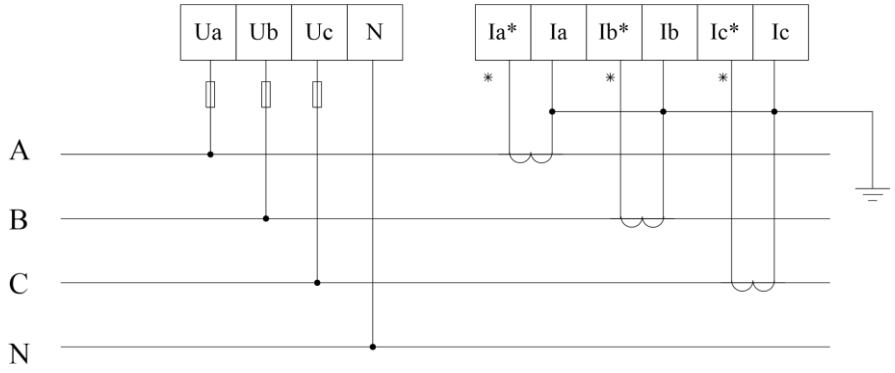

Fig 3 Three phase four lines connect via CT

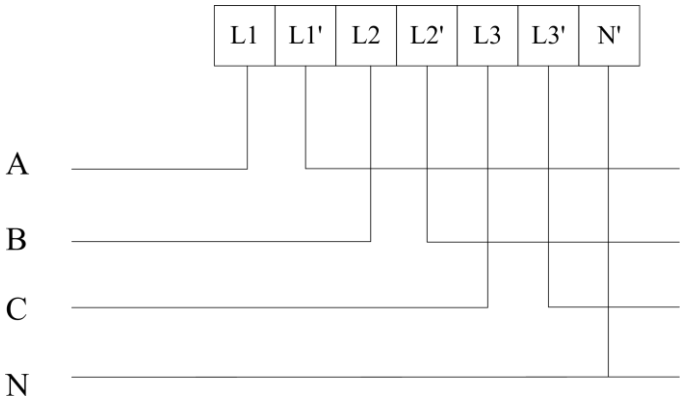

Fig 4 Three phase four lines direct connect

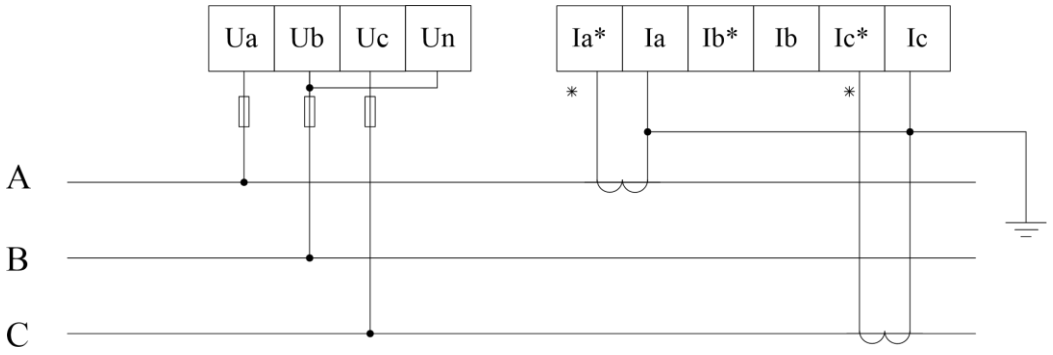

Fig 5Three phase three lines connect via CT

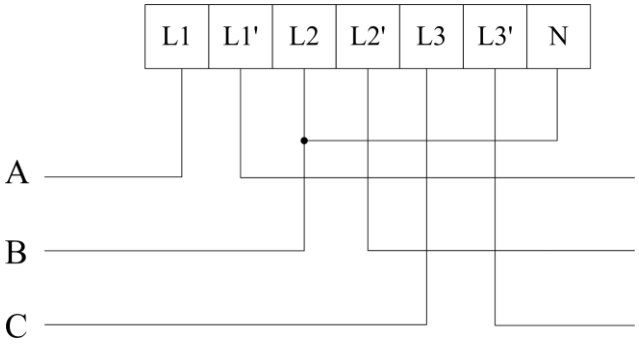

Fig 6 Three phase three lines direct connect

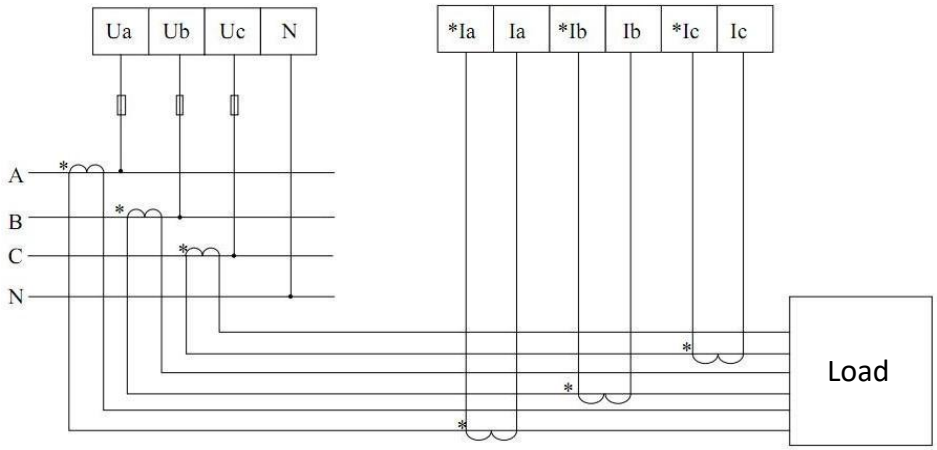

Fig 7 Three phase four lines, 3CT

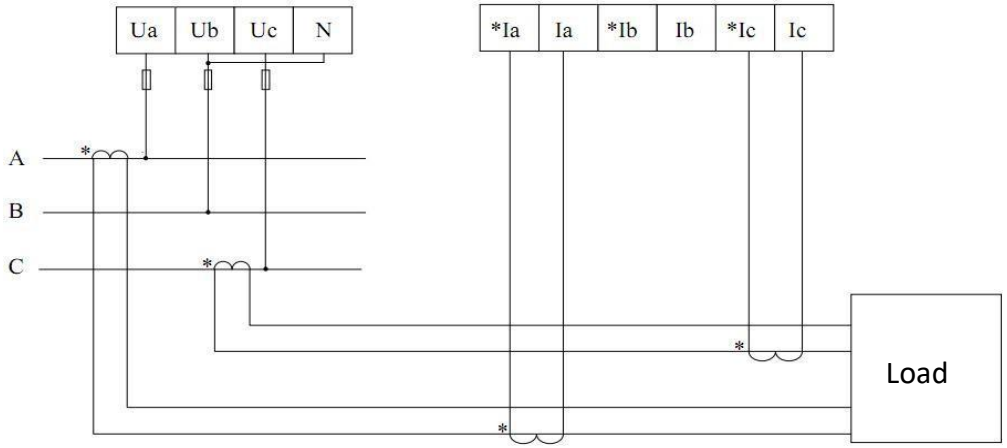

Fig 8 Three phase three lines, 2CT

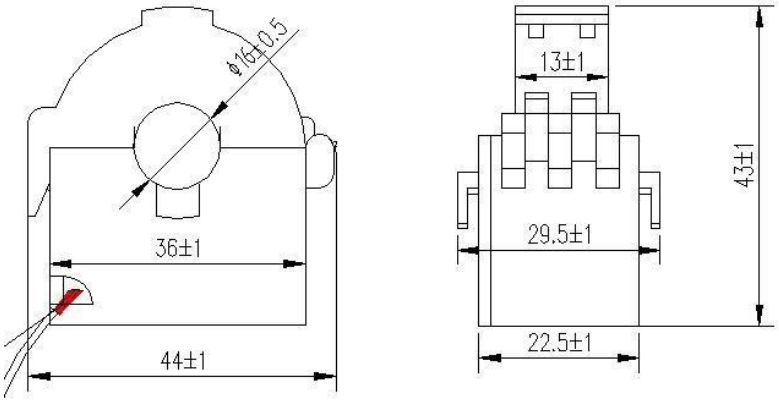

Fig 9 Outline of transformer

Note: The method of wiring is: input downward and output downward.

Switching input, output, NTC temperature terminals

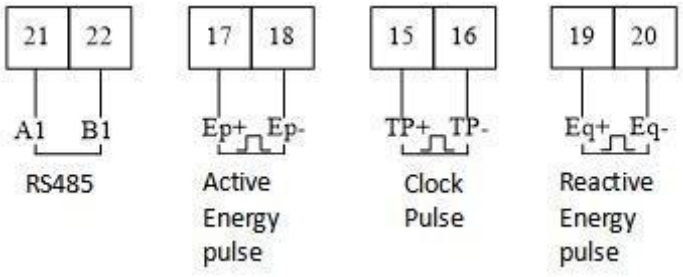

Fig 10 Communication, pulse connection

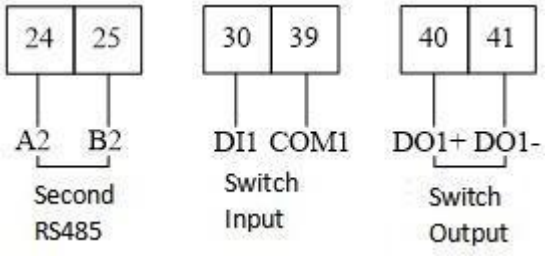

Fig 11 Communication, pulse connection

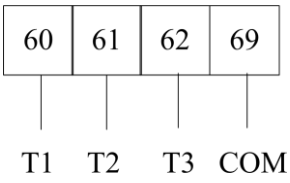

Fig 12 Outlay NTC temperature measurement

Switching output is relay output, can achieve the remote-control and alarm output.

The switch input adapts the method of on-off signal input and powered by outer power supply. It can be gotten by meter when there is a change of on or off via a switching input module. The parameter of switching input can not only get and show the state of local switching information but also achieve the communication via RS485, which called “remote information” function.

Note: (17-18) are active energy pulse, (60,61,62,69) are NTC temperature measurement port, (15,16) are clock pulse, (19,20) are reactive energy pulse, (40,41) are switch output and multiplex with (60,61), (24,25) are 2 path of communication, (30， 39) are switch input and multiplex with (62,69).

7 Function description

Measurement

The meter can measure all electrical parameters such as voltage, current, active power, reactive power, apparent power, power factor, frequency, 31st harmonic and total harmonic. The value format of voltage, current, frequency and power are listed as below.

Example: U = 220.1V， f = 49.98Hz, I = 1.99A， P = 0.439kW

Calculating

The meter can calculate the current active energy, forward active energy, reversing active energy, forward reactive energy and reversing reactive energy.

Timing

The meter has 2 time lists, and can be divided into 4 time zones per year. Each time list can be divided into 8 time periods and 4 tariff (F1、F2、F3、F4). The main purpose of multi-tariff is promote the energy efficiency and economic benefits.

Demand

There are some definitions on demand:

Demand	The average power in the demand cycle.
Maximum demand	The maximum value of demand in a period of time.
Slip time	A recurrence method to measure the demand from any time point during a period shorter than the demand period. The demand measured by this means is called sliding demand. The recurrence time is sliding window time.
Demand cycle	The time period between two same average value of demand.

The default demand cycle is 15 minutes, slip time is 1 minute.

The meter can measure 4 kinds of maximum demand: forward active, reversing active, inductance performance reactive, capacitance performance reactive maximum demand and the occur time.

History data statistics

The meter can record last 48 months or last 90 days history energy in each tariff.

Switching input and output

The switch input adapts the method of on-off signal input and powered by outer power supply. It can be gotten by meter when there is a change of on or off via a switching input module. The parameter of switching input can not only get and show the state of local switching information but also achieve the communication via RS485, which called “remote information” function.

Temperature measurement

The meter support three path of outlay NTC temperature measurement, the range of temperature is -40℃~99℃.

8 Operation and display

Key function description

Key symbol	Key name	Function
	Menu	Enter/quit menu

▲	Voltage and current, up	Check the voltage and current Leftward and change flash in programming menu
▼	Power, down	Check the power Rightward and change the value on flash
↵	Energy, enter	Check the energy Enter in programming menu

Display menu

The meter will show the forward active energy after powering. The customers can change the information showing by pressing the keys. The menu description is listed as below:

▲	Voltage on A, B, C phase, Current on A, B, C phase, Frequency, Date, Time, Address, Version, Test on display
▼	Total active/reactive/apparent power and on A, B, C phase, Total power factor and on A, B, C phase, Forward/reversing active/reactive maximum demand
↵	Total forward/reserving active/reactive energy, forward/reserving active/reactive spike/peak/flat/valley energy, forward active energy on A, B, C phase.

Note:

1 All the display menus above are in the model of ADL3000-EF three phases four lines with multi-tariff rate function and can be changed by the keys.

2 There will not be power or power factor on each phase and will only show total power and power factor (Active, reactive, apparent) under the three phase three lines.

3 There will not be date, time, maximum demand and energy by time without the function of multi-tariff rate.



Current forward active energy 12.34kWh



Current reversing active energy 12.34kWh



Current forward reactive energy 12.34kWh



Current forward active spike energy 12.34kWh



Current total power is 1.234kW



Current forward active demand is 1.234kW



Voltage on A phase is 123.4V



Current on A phase is 12.34A



Temperature on T1 is 25.5 cent degree



Temperature on T2 is 25.5 cent degree



Temperature on T3 is 25.5 cent degree

Note: There are parts of the display function, and other menus are familiar with the example above. The customers can understand the meaning refer to the above examples.

Key Menu

Press SET at any main menu and get in “PASS” interface, and then press ↵ show “0000”, and enter the code. If you enter a wrong code, it will show “fail” and back to main menu; and if you enter a right code, you can set the parameter. After setting the parameter and press SET, it will show “save” and save the change by pressing ↵ in “yes” interface and quit without save by pressing ↵ in “no” interface.

Data settings

Num	First menu		Second menu		
	Symbol	Mean	Symbol	Mean	Range
1	BUS	Communication settings	ADDR	Address setting	1-247
			Baud	Baud rate	19200、9600、4800、2400、1200
			Parity	Parity	None、Even
2	SyS	System settings	PL	Network	3P4L: 3 phase 4 lines 3P3L: 3 phase 3 lines
			EF.E	Multi-tariff rate	EF: Multi-tariff rate E: No multi-tariff rate
			Code	Code setting	1-9999
			LED	Time of light	1-9999
3	In.	Transformer settings	Pt	Voltage transformer	1-9999

			Ct	Current transformer	1-9999

Note: Customers can choose None or Even under Modbus protocol.

9 Communication description

The meter adapts MODBUS-RTU protocol, and the baud rate can be chosen from 1200bps、2400 bps、4800 bps、9600bps and 19200 bps. The parity is None.

The meter needs shielded twisted pair conductors to connect. Customers should consider the whole network's parameters such like communication wire's length, the direction, communication transformer and network cover range, etc.

Note:

Wiring should follow the wiring requirements;

Connect all the meter in the RS485 net work even some do not need to communication, which is benefit for error checking and testing;

Use two color wires in connecting wires and all the A port use the same color.

No longer than 1200 meters of RS485 bus line.

ADDR list

MODBUS-RTU protocol has 03H and 10H command to read and write registers respectively. The following chart is registers' address list:

Address	Variable	Length	R/W	Notes
0000H	Current total active energy	4	R	
0002H	Current spike total active energy	4	R	
0004H	Current peak total active energy	4	R	
0006H	Current flat total active energy	4	R	
0008H	Current valley total active energy	4	R	
000AH	Current forward active total energy	4	R	
000CH	Current forward active spike energy	4	R	
000EH	Current forward active peak energy	4	R	
0010H	Current forward active flat energy	4	R	
0012H	Current forward active valley energy	4	R	

0014H	Current reversing active total energy	4	R	
0016H	Current reversing active spike energy	4	R	
0018H	Current reversing Active peak energy	4	R	
001AH	Current reversing active flat energy	4	R	
001CH	Current reversing Active valley energy	4	R	
001EH	Current total reactive energy	4	R	
0020H	Current total reactive spike energy	4	R	
0022H	Current total reactive peak energy	4	R	
0024H	Current total reactive flat energy	4	R	
0026H	Current total reactive valley energy	4	R	
0028H	Current forward reactive total energy	4	R	
002AH	Current forward reactive spike energy	4	R	
002CH	Current forward reactive peak energy	4	R	
002EH	Current forward reactive flat energy	4	R	
0030H	Current forward reactive valley energy	4	R	
0032H	Current reversing reactive total energy	4	R	
0034H	Current reversing reactive spike energy	4	R	
0036H	Current reversing reactive peak energy	4	R	
0038H	Current reversing reactive flat energy	4	R	
003AH	Current reversing reactive valley energy	4	R	
003CH	Date， time	6	R/W	

003FH high byte	First communication path：Address	1	R/W	1～247
003FH low byte	First communication path：Baud rate	1	R/W	1：9600pbs 2：4800pbs 3：2400pbs 4：1200pbs
0040H	Pulse constant	2	R	
0041H … 0046H	4 time zones	3×4	R/W	Time zone table
0047H … 0052H	1-8period of time Parameters setting information	3×8	R/W	The first time list
0053H … 0060H	1-9period of time Parameters setting information	3×9	R/W	The second time list
0061H	Voltage of A phase	2	R	
0062H	Voltage of B phase	2	R	
0063H	Voltage of C phase	2	R	
0064H	Current of A phase	2	R	
0065H	Current of B phase	2	R	
0066H	Current of C phase	2	R	
0067H-0076H	Reserve			
0077H	Frequency	2	R	
0078H	Voltage between A-B	2	R	
0079H	Voltage between C-B	2	R	
007AH	Voltage between A-C	2	R	
007BH	Forward active maximum demand	2	R	
007CH	Time of occurrence for the forward active maximum amount	4	R	

007EH	Reversing active maximum demand	2	R	
007FH	Time of occurrence for the reversing active maximum amount	4	R	
0081H	Maximum forward demand for reactive power	2	R	
0082H	Time of occurrence for the forward reactive maximum amount	4	R	
0083H	Maximum reversing demand for reactive power	2	R	
0085H	Time of occurrence for the reversing reactive maximum amount	4	R	
0087H	Forward active energy of A phase	4	R	
0089H	Forward active energy of B phase	4	R	
008BH	Forward active energy of C phase	4	R	
008DH	Voltage transfer	2	R/W	
008EH	Current transfer	2	R/W	
008FH high byte	Threshold of voltage	1	R/W	
008FH low byte	State of loss voltage	1	R	
0090H	Reserve	2	R	
0091H high byte	Running state 1	1	R/W	
0091H low byte	Running state 2	1	R/W	
0092H	Zero sequence current	2	R	
0093H	Voltage imbalance	2	R	unit 0.1%
0094H	Current imbalance	2	R	
0095H	First communication path： Testing byte（High 8 bytes） Stop byte（Low 8 bytes）	2	R/W	testing byte： 0： none 2： even stop byte： 0: 1 stop byte

				1: 2 stop bytes
0096H	Second communication path： Address（High 8 bytes） Baud rate（Low 8 bytes）	2	R/W	Same as the first communication path
0097H	Second communication path： Testing byte（High 8 bytes） Stop byte（Low 8 bytes）	2	R/W	Same as the first communication path
0098H- 00B1H	Reserved			
00B2H … 00BAH	9-14 period of time Parameters setting information			The first time list
00BBH … 00C3H	9-14 period of time Parameters setting information			The second time list
00C4H … 0163H	Reserved			
0164H	Active power of A phase	4	R	
0166H	Active power of B phase	4	R	
0168H	Active power of C phase	4	R	
016AH	Total active power	4	R	
016CH	Reactive power of A phase	4	R	
016EH	Reactive power of B phase	4	R	
0170H	Reactive power of C phase	4	R	
0172H	Total reactive power	4	R	

0174H	Apparent power of A phase	4	R	
0176H	Apparent power of b phase	4	R	
0178H	Apparent power of c phase	4	R	
017AH	Total apparent power	4	R	
017CH	Power factor of A phase	2	R	
017DH	Power factor of B phase	2	R	
017EH	Power factor of C phase	2	R	
017FH	Total power factor	2	R	
0180H	Maximum forward active demand a day	2	R	
0181H	Occur time	2	R	
0182H	Maximum reversing active demand a day	2	R	
0183H	Occur time	2	R	
0184H	Maximum forward reactive demand a day	2	R	
0185H	Occur time	2	R	
0186H	Maximum reversing reactive demand a day	2	R	
0187H	Occur time	2	R	
0188H	Maximum forward active demand last day	2	R	
0189H	Occur time	2	R	
018AH	Maximum reversing active demand last day	2	R	
018BH	Occur time	2	R	
018CH	Maximum forward reactive demand last day	2	R	

018DH	Occur time	2	R	
018EH	Maximum reversing reactive demand last day	2	R	
018FH	Occur time	2	R	
0190H	Maximum forward active demand last 2 days	2	R	
0191H	Occur time	2	R	
0192H	Maximum reversing active demand last 2 days	2	R	
0193H	Occur time	2	R	
0194H	Maximum forward reactive demand last 2 days	2	R	
0195H	Occur time	2	R	
0196H	Maximum reversing reactive demand last 2 days	2	R	
0197H	Occur time	2	R	
0198H	Current forward active demand	2	R	
0199H	Current reversing active demand	2	R	
019AH	Current forward reactive demand	2	R	
019BH	Current reversing reactive demand	2	R	
019BH-01FFH	Reserved			
0200H	Maximum voltage on A phase	2	R	
0201H	Occur date	2	R	
0202H	Occur time	2	R	
0203H	Maximum voltage on B phase and occur time	6	R	
0206H	Maximum voltage on C phase and occur time	6	R	
0209H	Maximum current on A phase and occur time	6	R	
020CH	Maximum current on B phase and occur time	6	R	

020FH	Maximum current on C phase and occur time	6	R
0212H	Maximum active power on A phase	4	R
0214H	Occur date	2	R
0215H	Occur time	2	R
0216H	Maximum active power on B phase and occur time	8	R
021AH	Maximum active power on C phase and occur time	8	R
021EH	Maximum active power and occur time	8	R
0222H	Maximum reactive power on A phase and occur time	8	R
0226H	Maximum reactive power on B phase and occur time	8	R
022AH	Maximum reactive power on C phase and occur time	8	R
022EH	Maximum reactive power and occur time	8	R
0232H	Maximum apparent power on A phase and occur time	8	R
0236H	Maximum apparent power on B phase and occur time	8	R
023AH	Maximum apparent power on C phase and occur time	8	R
023EH	Maximum apparent power and occur time	8	R
0242H	Minimum voltage on A phase and occur time	6	R
0245H	Minimum voltage on B phase and occur time	6	R
0248H	Minimum voltage on C phase and occur time	6	R
024BH	Minimum current on A phase and occur time	6	R
024EH	Minimum current on B phase and occur time	6	R
0251H	Minimum current on C phase and occur time	6	R
0254H	Minimum active power on A phase and occur time	8	R

0258H	Minimum active power on B phase and occur time	8	R	
025CH	Minimum active power on C phase and occur time	8	R	
0260H	Minimum active power and occur time	8	R	
0264H	Minimum reactive power on A phase and occur time	8	R	
0268H	Minimum reactive power on B phase and occur time	8	R	
026CH	Minimum reactive power on C phase and occur time	8	R	
0270H	Minimum reactive power and occur time	8	R	
0274H	Minimum apparent power on A phase and occur time	8	R	
0278H	Minimum apparent power on B phase and occur time	8	R	
027EH	Minimum apparent power on C phase and occur time	8	R	
0280H	Minimum apparent power and occur time	8	R	
0285H-1FFFH	Reserve			
2000H	T1 temperature	2	R	
2001H	T2 temperature	2	R	
2002H	T3 temperature	2	R	

History energy frozen time and history energy energy date

ADL3000-EF's registers on frozen by day and by month.

Address	Name	R/W	Note
0121H	Frozen time by day	R/W	Null (High byte) Hour(Low byte)
0122H	Frozen time by month	R/W	Day(High byte) Hour(Low byte)

ADL3000-EF can achieve the history energy statistic in last 48 months and last 90days. (Each tariff rate of energy can be recorded.)The history energy record can only be read by assemblage and the length of whole part is 120 byte (60 registers), and list below is the registers' name:

Address	Name
1001H	Assemblage of last 1 month demand and energy
1002H	Assemblage of last 2 months demand and energy
…	…

Data list	Name
0000H	Frozen time: YY-MM
0001H	Frozen time: DD-hh
0002H	Total forward active energy

1030H	Assemblage of last 48 months demand and energy
1101H	Assemblage of last 1 day demand and energy
1102H	Assemblage of last 2days demand and energy
…	…
115AH	Assemblage of last 90days demand and energy

0004H	Spike forward active energy
0006H	Peak forward active energy
0008H	Flat forward active energy
000AH	Valley forward active energy
000CH	Total reversing active energy
000EH	Spike reversing active energy
0010H	Peak reversing active energy
0012H	Flat reversing active energy
0014H	Valley reversing active energy
0016H	Total forward reactive energy
0018H	Spike forward reactive energy
001AH	Peak forward reactive energy
001CH	Flat forward reactive energy
001EH	Valley forward reactive energy
0020H	Total reversing reactive energy
0022H	Spike reversing reactive energy
0024H	Peak reversing reactive energy
0026H	Flat reversing reactive energy
0028H	Valley reversing reactive energy
002AH	Active energy on A phase
002CH	Active energy on B phase
002EH	Active energy on C phase
0030H	Maximum forward active demand
0031H	Occur time: mm-hh
0032H	Occur time : DD-MM
0033H	Maximum reversing active demand
0034H	Occur time: mm-hh
0035H	Occur time : DD-MM
0036H	Maximum forward reactive demand

0037H	Occur time: mm-hh
0038H	Occur time : DD-MM
0039H	Maximum reversing reactive demand
003AH	Occur time: mm-hh
003BH	Occur time : DD-MM

Sub harmonic data

ADL3000-EH has function of harmonic. The function include 31st harmonic statistics of voltage and current, harmonic voltage and current of each phase apparently, harmonic active/reactive power of each phase apparently, fundamental voltage and current of each phase apparently and fundamental active/reactive power of each phase apparently.

Addr	Name	Length	R/W	Note
05DDH	THDUa	2	R	Total distortion rate of voltage and current on each phase Int Keep 3 decimal places
05DEH	THDUb	2	R	
05DFH	THDUc	2	R	
05E0H	THDIa	2	R	
05E1H	THDIb	2	R	
05E2H	THDIc	2	R	
05E3H	THUa	2×30		Harmonic voltage on 2nd-31st Int Keep 3 decimal places
0601H	THUb	2×30		
061FH	THUc	2×30		
063DH	THIa	2×30		Harmonic current on 2nd-31st Int Keep 2 decimal places
065BH	THIb	2×30		
0679H	THIc	2×30		
0697H	Fundamental voltage on A phase	2		Int Keep 1 decimal places
0698H	Fundamental voltage on B phase	2		
0699H	Fundamental voltage on C phase	2		
069AH	Harmonic voltage on A phase	2		
069BH	Harmonic voltage on B phase	2		
069CH	Harmonic voltage on C phase	2		
069DH	Fundamental current on A phase	2		Int Keep 2 decimal places
069EH	Fundamental current on B phase	2		
069FH	Fundamental current on C phase	2		
06A0H	Harmonic current on A phase	2		
06A1H	Harmonic current on B phase	2		
06A2H	Harmonic current on C phase	2		
06A3H	Fundamental active power on A phase	2		Int Keep 3 decimal places
06A4H	Fundamental active power on B	2		

	phase		
06A5H	Fundamental active power on C phase	2	
06A6H	Total fundamental active power	2	
06A7H	Fundamental reactive power on A phase	2	
06A8H	Fundamental reactive power on B phase	2	
06A9H	Fundamental reactive power on C phase	2	
06AAH	Total fundamental reactive power	2	
06ABH	Harmonic active power on A phase	2	
06ACH	Harmonic active power on B phase	2	
06ADH	Harmonic active power on C phase	2	
06AEH	Total harmonic active power	2	
06AFH	Harmonic reactive power on A phase	2	
06B0H	Harmonic reactive power on B phase	2	
06B1H	Harmonic reactive power on C phase	2	
06B2H	Total harmonic reactive power	2	

SOE record

Address	Name
3001H	Last event record
3002H	Last 2 event record
…	…
3064H	Last 100 event record

Data list	Name
0000H	Occur date: YY-MM
0001H	Occur time: DD-hh
0002H	Occur time: mm-ss
0004H	Event number
0005H	Event details
0006H	Reserve

Event num	Name
0100/0101	Power on/off
0200	Clear

Details	Note
0001	Clear current energy
0002	Clear history energy on Flash
0003	Clear maximum demand
0004	Clear history energy
0005	Clear maximum value on a period
0006	Clear out

0300	DO action	0000	DO off
		0001	DO on
0400	UI record	UI	Bit0: Over-voltage on A phase Bit1: Over-voltage on B phase Bit2:; Over-voltage on C phase Bit3: Lose-voltage on A phase Bit4: Lose-voltage on B phase Bit5: Lose-voltage on C phase Bit6: Reversing on A phase Bit7: Reversing on B phase Bit8: Reversing on C phase Bit9: Over current on A phase Bit10: Over current on B phase Bit11: Over current on C phase Bit12: Low current on A phase Bit13: Low current on B phase Bit14: Low current on C phase
0700	Time calibration		